© Panduit Corp. 2015 **INSTALLATION INSTRUCTIONS** **CD-IA-0004**

Universal Network Zone System
Part Numbers: Z22U-****

TABLE OF CONTENTS

Overview of Products	**Page**	**3**
Safety Information / Warnings	**Page**	**4**
Specs/ Tools Needed	**Page**	**5**
Wall Mounting Bracket Installation	**Page**	**6**
Wall Mounting	**Page**	**7**
Removable Gland Plate	**Page**	**8**
Reversible Door	**Page**	**9**
Recommended Installation Instructions for:		
Switch Installation	**Page**	**10**
Cage Removal	**Page**	**11**
Power Entry	**Page**	**11**
Uplink Entry	**Page**	**11**
Downlink Entry	**Page**	**11**
Patch Cord Routing	**Page**	**12**
Connect Zone SYS To Uplink	**Page**	**13**

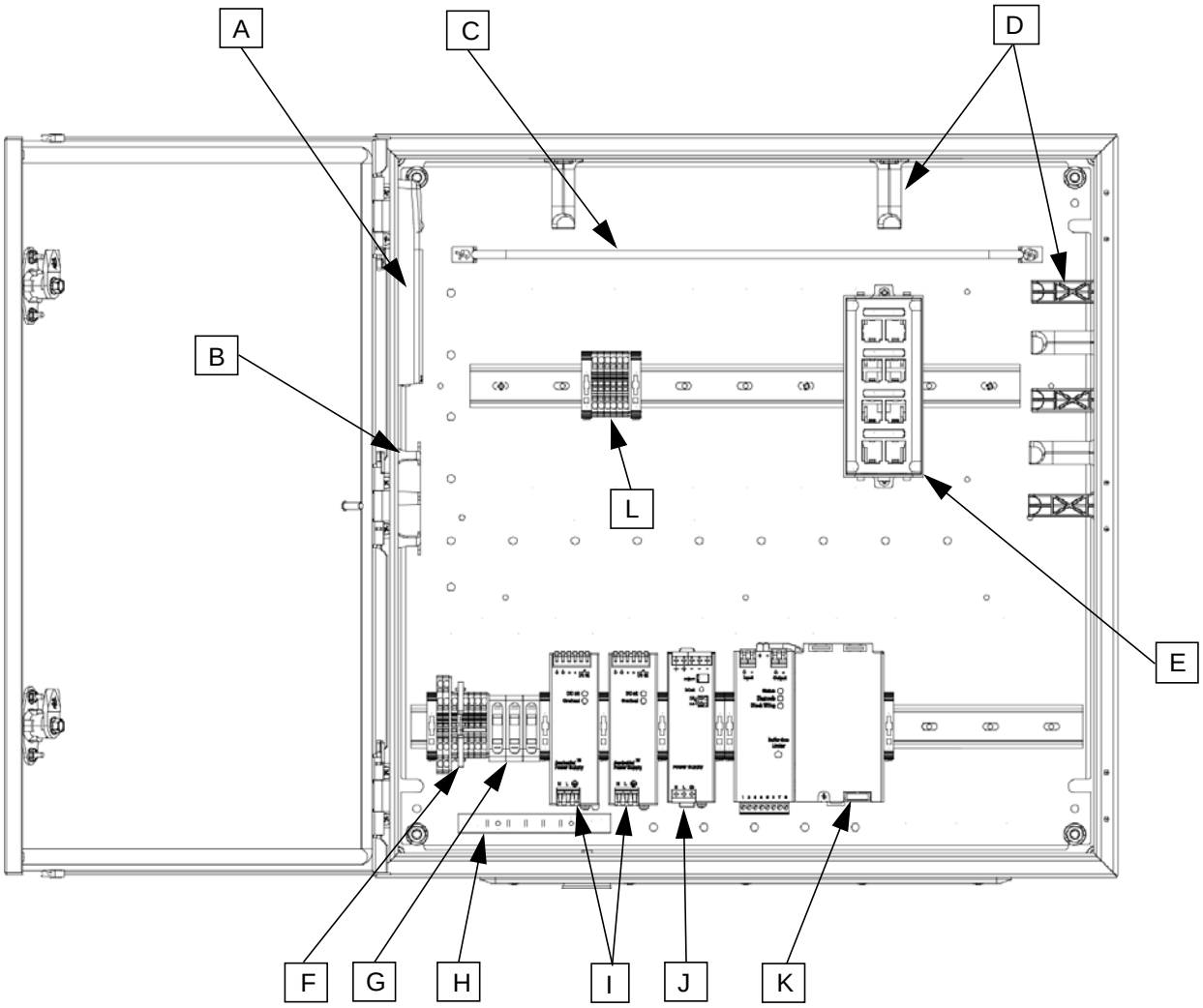

Universal Network Zone System configurations include an enclosure with required connectivity, cable management, internal factory-connected wiring and includes partner equipment as-specified on the Field Wiring Diagram supplied inside each unit.

Each unit may include one or more of the following DIN-Rail mountable items:

A) Fiber patch box
B) Fiber slack spool
C) Strain relief bar
D) Management slack L-rings
E) IndustrialNet 8-Port DIN Rail Mount Copper Patch Panel
F) Field-wiring terminal for customer-supplied power input wiring
G) Lockout terminal contact blocks
H) Ground bar terminal for customer-supplied ground
I) Redundant 24V-DC power supplies
J) 48V-DC POE power supply (Optional)
K) 24V-DC Battery UPS (Optional)
L) Wiring for customer supplied switch

SAFETY INFORMATION

The information and instructions contained in this document are not intended to be utilized as a substitute for proper training and experience in the safe installation and operation of product. Prior to installation, it is the Buyer's responsibility to consult with the appropriate local Authority Having Jurisdiction (AHJ) for all applicable codes, permits, regulations and standards.
This product, including any equipment that may be installed inside, should only be installed and serviced by a licensed electrical contractor, or competent technician, that meets the following qualifications;

- Is thoroughly familiar with this product and the instructions for installation and operation
- Is trained (accredited) in industry-accepted safe operating practices and procedures regarding identification and mitigation of high- and low- voltage hazards and situations.
- Is trained to identify and install appropriately-sized Branch Circuit Disconnect(s) with appropriately-sized Branch-Circuit Protective Rating and Short-Circuit Current Rating (SCCR), before connecting Panduit product to the branch circuit.
- Is trained and authorized to energize, de-energize, clear and ground power distribution equipment.
- Is trained in the care and use of appropriate PPE (personal protective equipment) including, but not limited to; arc-flash protective clothing, safety glasses, face shield, hard hat, gloves and non-conductive tools (clamp stick, hot stick, etc.).

WARNING

Be sure wall is capable of supporting cabinet and equipment.

DISCLAIMER OF WARRANTIES AND LIMITATION OF LIABILITIES
The practices contained herein are designed as a guide for use by persons having technical skill at their discretion and risk. Panduit does not guarantee any favorable results or assume any liability in connection with these instructions. Local, State, Federal, and Industry Codes and Regulations, as well as manufacturers requirements, must be consulted before proceeding with any project. Panduit Corp. makes no representations of nor assumes any responsibility for the accuracy or completeness set forth herein. Panduit disclaims any liability arising from any information contained herein or for the absence of same.

Network Zone System Specifications			
Standards (May Include)	UL 508A		EN55022
	IEC 60950-1		EN55024
	IEC 60950-22		VCCI
	FCC, Part 15, Subpart B		ICES-003
Enclosure Rating (May include)	UL Type 4/12 and IP66 (IEC 60529), NEMA 4X available All electrical components rated for Class 1, Division 2 environments		
Environment	40°C ambient outside of enclosure at up to 95% (non-condensing) humidity		
Installation	Wall mount with optional outside-mount flange		
Enclosure Dimensions	**Height**	**Width**	**Depth**
	24” (610 mm)	24” (610 mm)	11.7” (297 mm)
Max Switch Dimensions	6.5” (165.1 mm)	10.0” (254.0 mm)	6.0” (152.4 mm)
Weight	90 lbs. (40.8 kg)		

Use Field Wiring Diagram for the Electrical Rating and Maximum Over-current Protection.
For customer supplied switch use manufacture instructions for installing and wiring.

Tools and supplies needed to complete install of Integrated Zone System: (not included)

- Fiber-optic trunk cable: FSPD504 or similar
- LC Fiber-optic connectors: FLCDMCXAQY or similar
- Fiber-optic termination tools: OptiCam termination kit or similar
- Category 6 copper cable for downlinks: PUR6504BU-UY or similar
- Wire cutters for copper cable termination
- Power wiring: #14 AWG recommended
- Rigid conduit for power and copper downlink cables
- Max Din Rail Mount Switch
- Tools to cut enclosure sidewalls: Greenlee punch or similar
- External Power Disconnect
- 5/16” bolts for wall mounting of steel enclosure
- #6 AWG Infrastructure ground cable: RGEJ660PF or similar
- Screw drivers: #2 Philips, 3/16”, and 2.5mm flathead
- 3/8" bolts for wall mounting of stainless steel enclosure
- 3/8" socket or box wrench ground bar

Wall Mounting Bracket Installation

Note: The enclosure may be mounted to the wall without the mounting brackets

Step 1: Turn enclosure on its side with the locks orientated towards the top. Using Latch Tool, turn both locks towards each other to open door.

Step 2: Install Wall Mounting Brackets into back of the enclosure aligning threaded studs on brackets to holes located in back of the enclosure. Be sure obround mounting holes on the wall mounting bracket align outward.

Step 3: Secure Wall Mounting brackets using sealing washers and (1) per threaded stud.

Torque spec:

Steel Enclosure: 5/16" washers = 30 in-lbs

Stainless Steel Enclosure: 3/8" washers = 40 in-lbs

Step 4: Close Door. Using Latch Tool, turn both locks to secure the door.

If Mounting Flanges are not used:

For Steel Enclosure: Use 5/16" Sealing Washer (supplied) and a 5/16" Bolt (not supplied) in the locations where the threaded studs in the mounting flanges would go to mount enclosure directly to wall.

For Stainless Steel Enclosure: Use 3/8" Sealing Washer (supplied) and a 3/8" Bolt (not supplied) in the locations where the threaded studs in the mounting flanges would go to mount enclosure directly to wall.

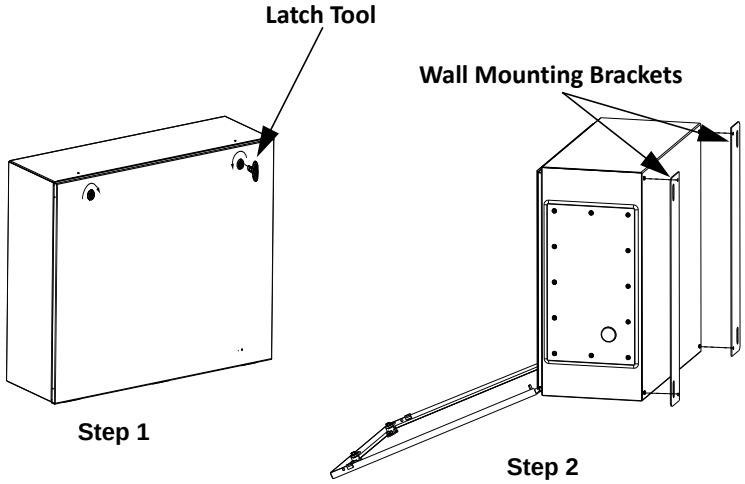

Step 1

Step 2

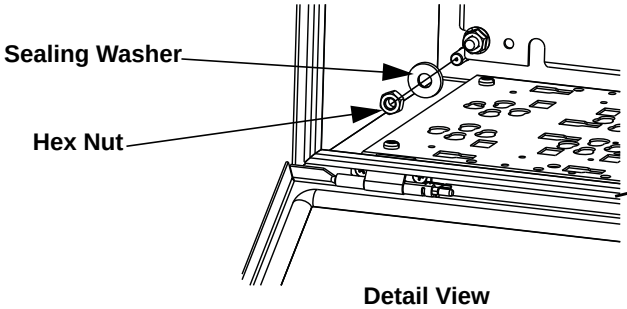

Detail View

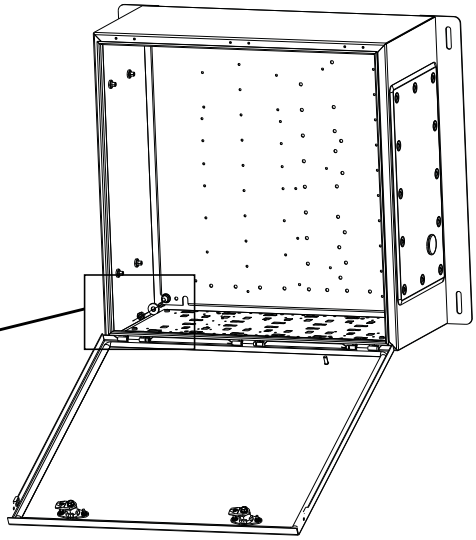

Step 3

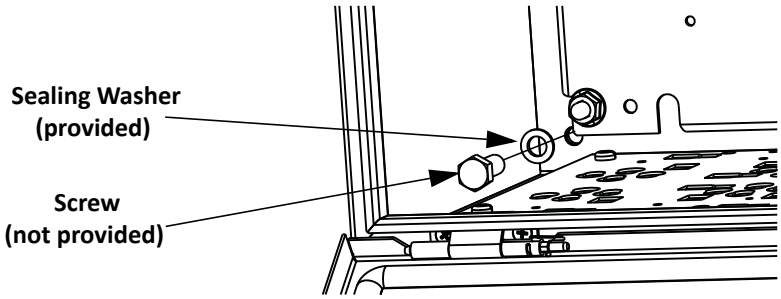

Wall Mounting

Enclosure may be mounted on any wall utilizing Unistrut or by drilling directly into any concrete wall. There are two mounting hole locations on the top flange and two locations at the bottom flange.

Step 1:
Drill holes 19.25"-22" apart horizontally and 26" apart vertically.

Step 2:
Mount the enlosure with the locks to the right and secure.

If mounting flanges are not used:
The holes in the wall will be 22.5" apart horizontally and 34.5" apart vertically.

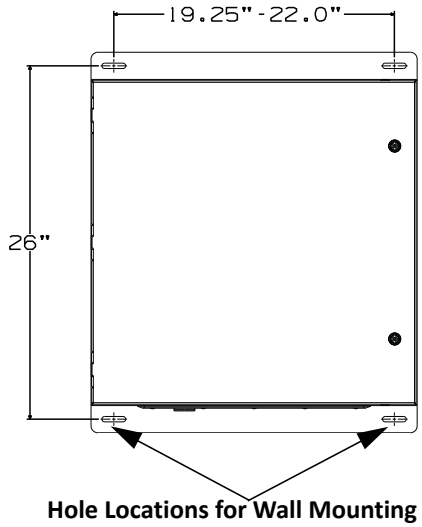

Hole Locations for Wall Mounting

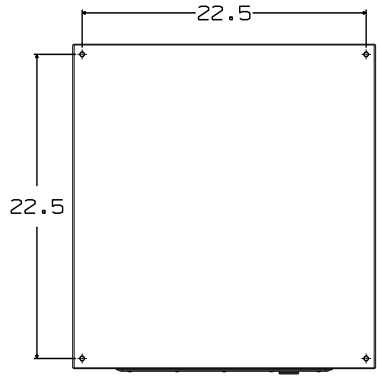

Backview for wall mounting

Removable Gland Plate

The Gland Plate, located on the bottom of the enclosure, is removable for machining to accept bulkhead connectors or compression fittings. Remove (12) screws and (12) flat washers on the bottom of the enclosure to remove plate from the enclosure. Accommodations for incoming conduit have been supplied on the enclosure. A 1/2” conduit plug is installed in the recommended incoming power location. Recommend installation of IP66 rated conduit fittings that comply with the IEC codes that are applicable to the intended application. When reinstalling the gland plate, ensure the screws are tightened until the gland plate flanges make contact with the enclosure surface.

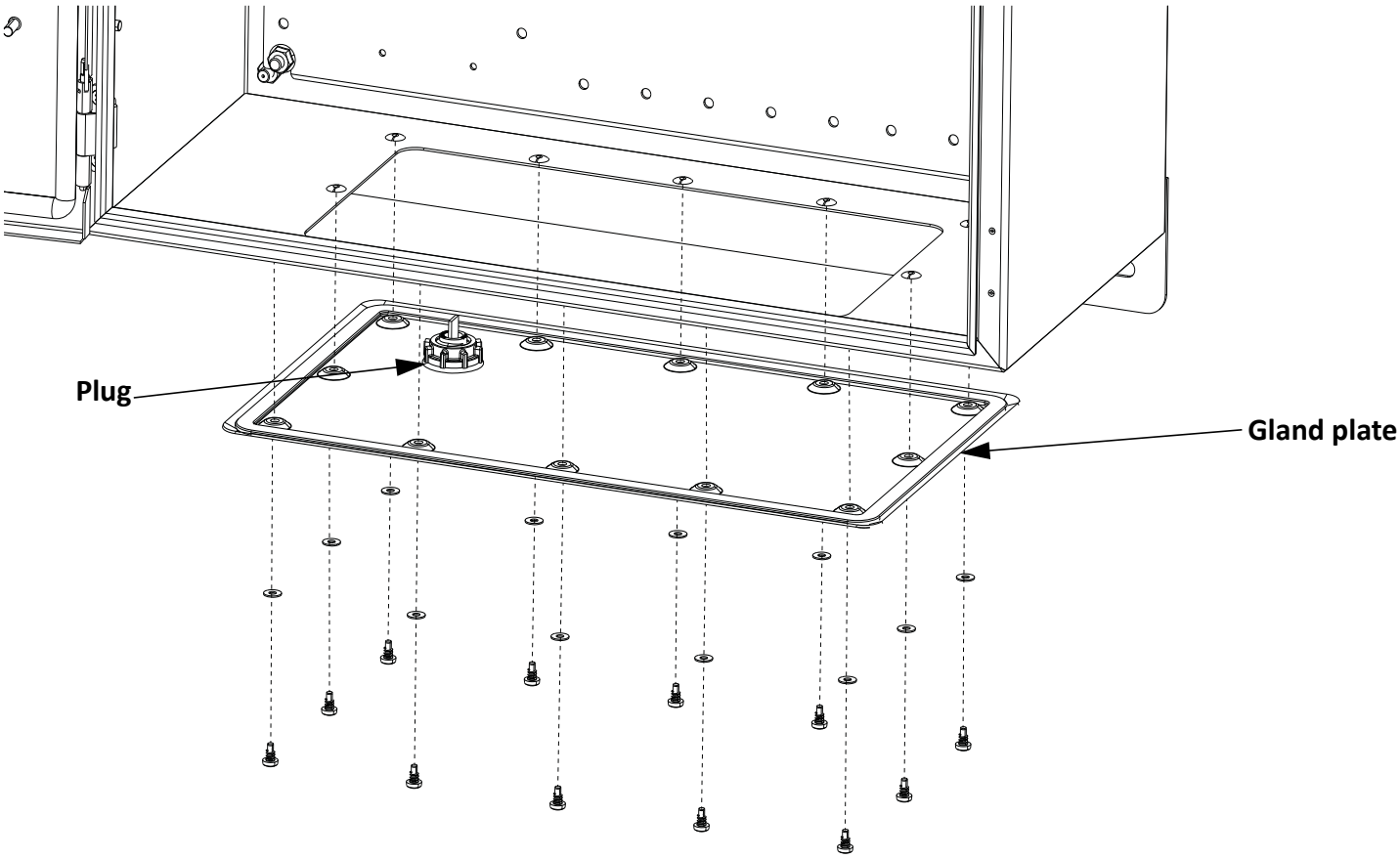

Reversible Door

The enclosure comes with the door opening to the left.
The door may be reversed to open to the right.

Step 1: Remove pins from the door hinges.
Step 2: Remove screws and door hinges
Step 3: New Hole locations will have to be drilled or punched out. Reinstall hinges and screws on opposite side.
Step 4: Turn door 180 degrees and mount to the opposite side of the enclosure. Insert the same pins to secure the door.
Step 5: Install screws and washers, provided in hardware bag, in the original hinge mounting holes.

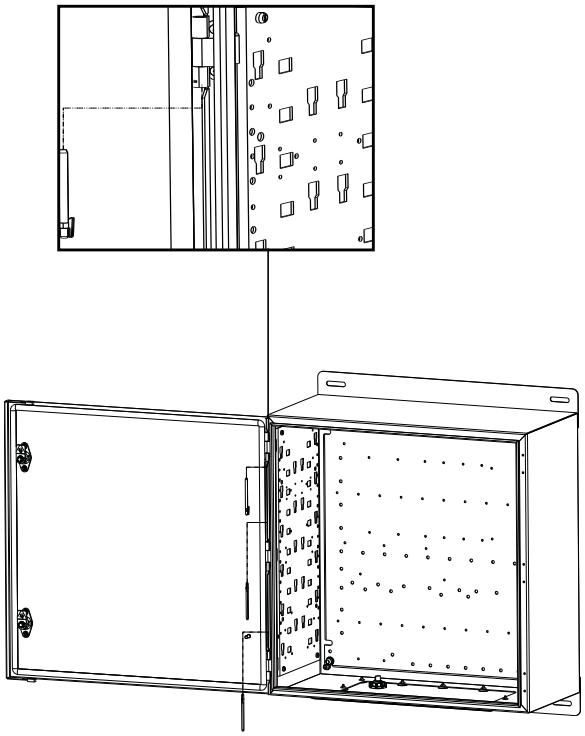

STEP 1

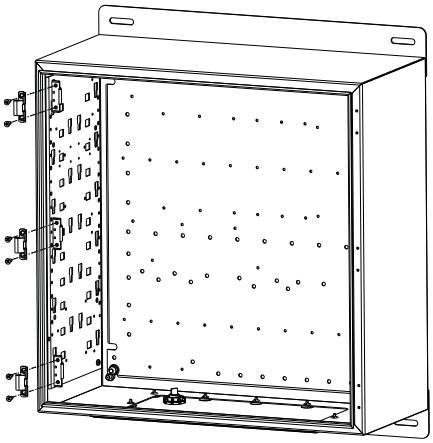

STEP 2

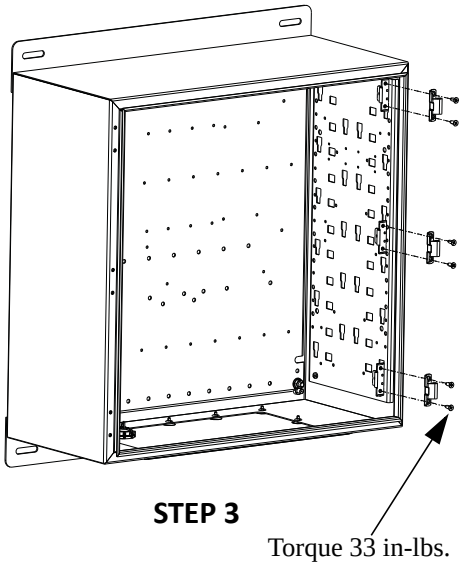

STEP 3

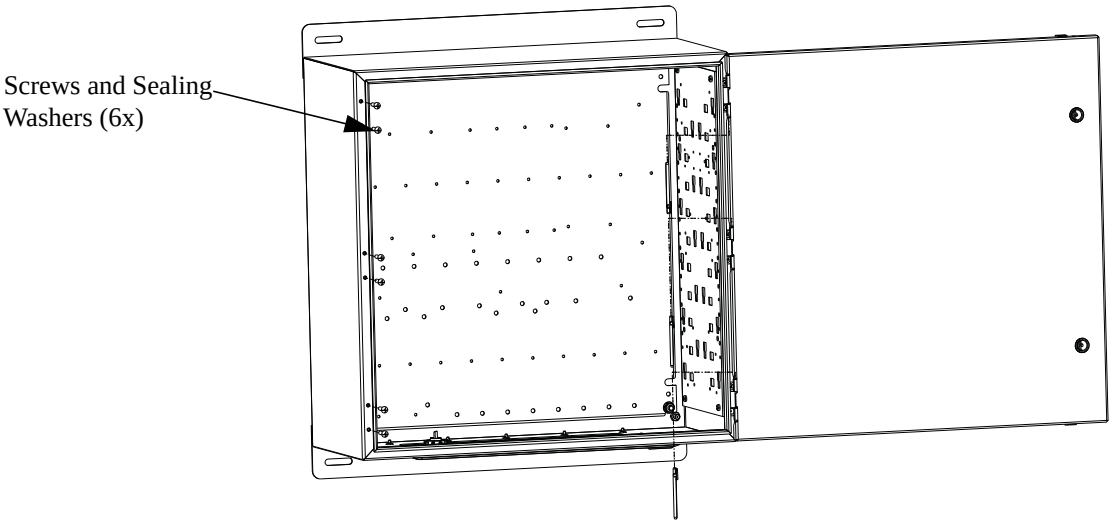

STEP 4 and 5

Switch Installation

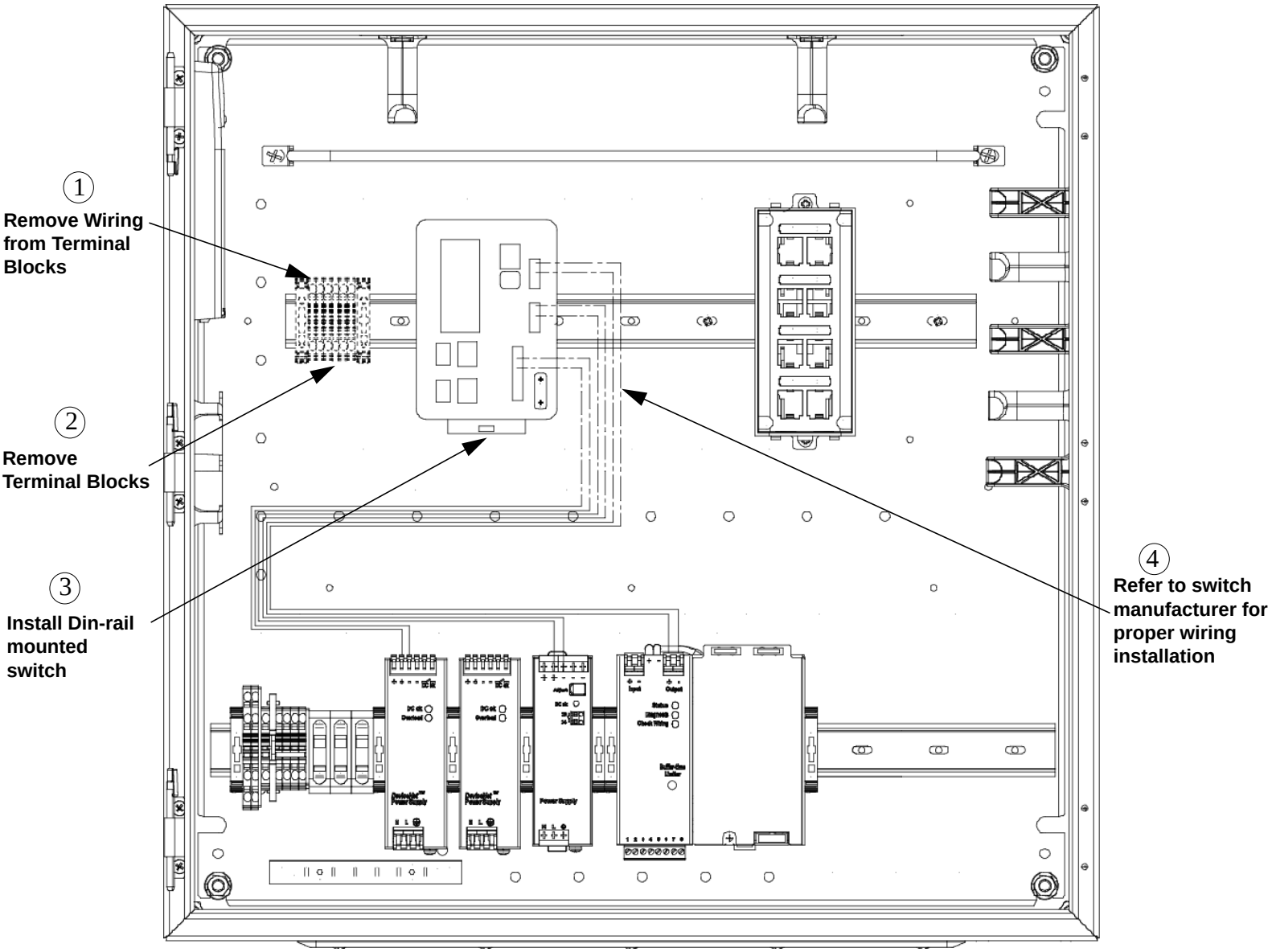

Switch Installation Instructions

1. **Remove wires from terminal blocks**
2. **Remove terminal blocks**
3. **Install switch**
4. **Wire switch - Refer to switch manufacturer's instructions and supplied Field Wiring Diagram for proper wiring technique.**
5. **Install supplied ground wire to switch.**

***Note: Do not apply power prior to terminal block removal and switch installation.**

Cage Removal

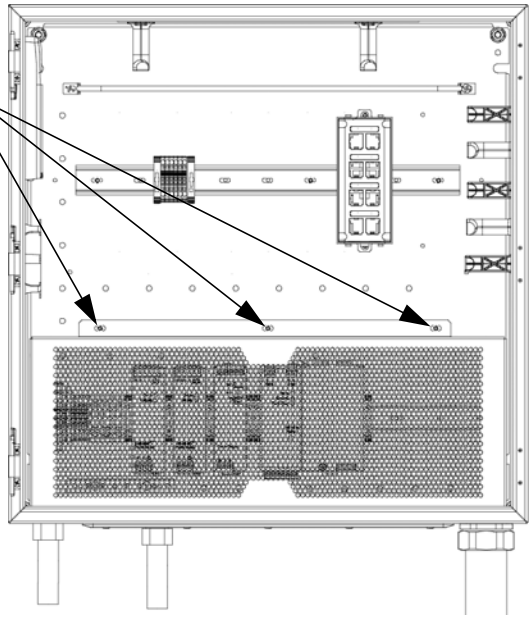

Recommended Installation Instructions for Power Entry

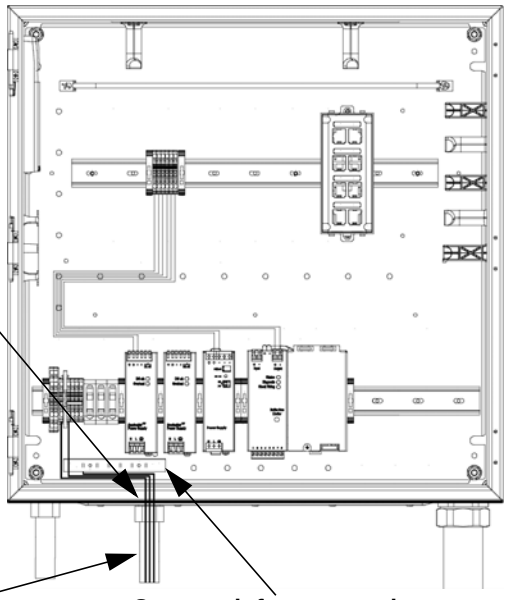

Recommended Installation Instructions for Uplink Entry

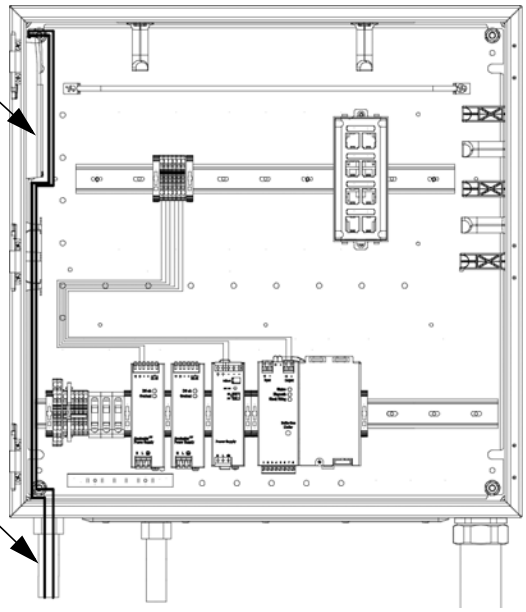

See page "13" for details

Recommended Installation Instructions for Downlink Entry

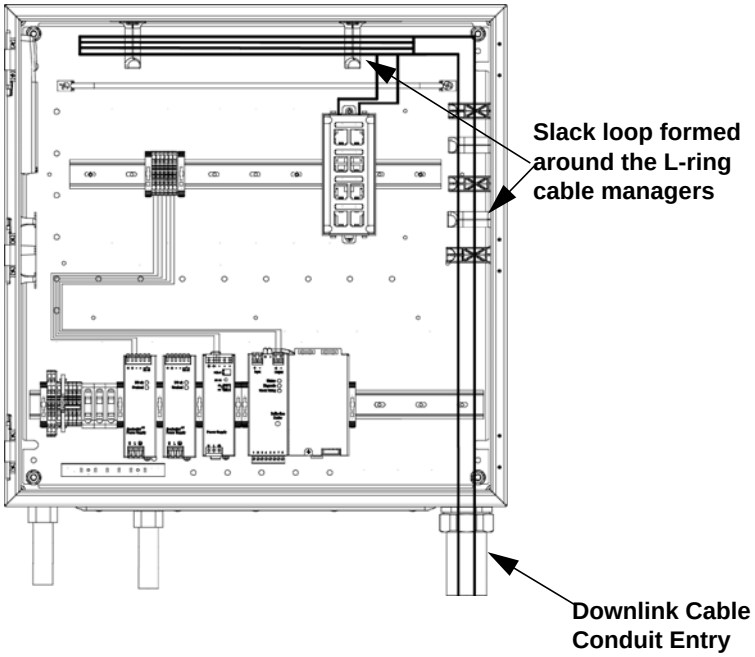

Patch Cord Routing

Patch cords supported by the strain relief bar and L-ring managers, routed from the switch to the patch module

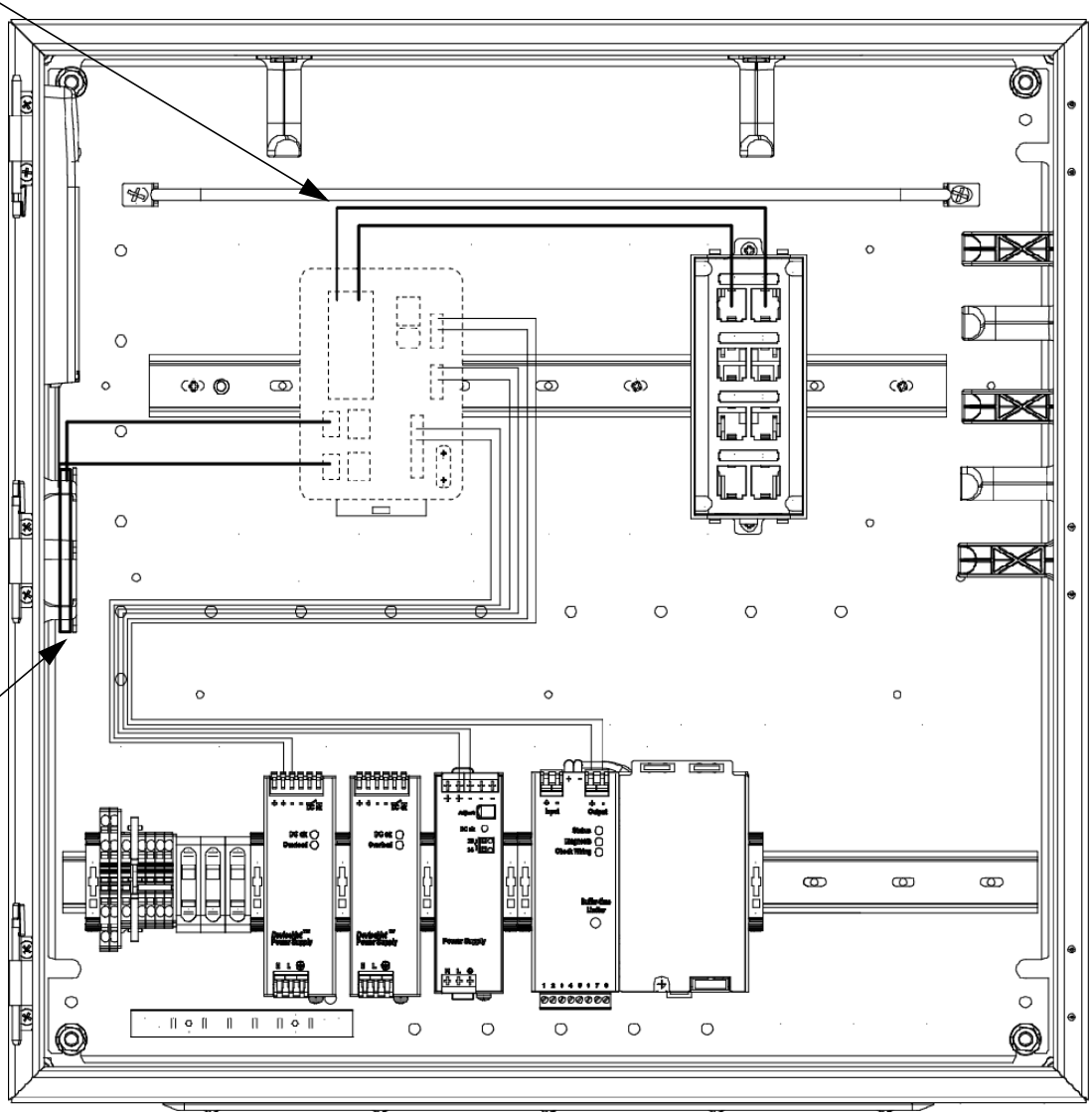

Fiber patch cord slack on the side mounted spool

Connecting to Zone System Uplink Ports

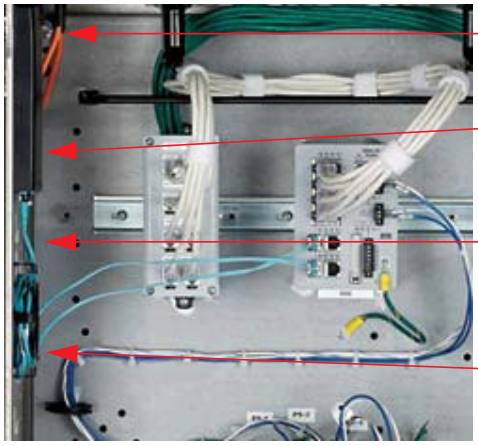

The Zone Enclosure can have either a fiber or copper uplink. Copper uplinks are limited to 330ft (100m) distance and relatively noise free environements. It is recommended to have a structured cabling approach, terminating the horizontal cable to an RJ-45 jack or LC adapter.

Copper Uplink

There are 2 copper RJ-45 uplink ports that can be configured for a star, ring, or linear topology. the copper horizontal cable can be brought straight into the enclosure via conduit.

The uplink copper horizontal cables should be terminated to the DIN Patch Box (8 ports). The Patch Panel (48 ports) may be used if patch box is full. The provided Panduit Patch Cords connect the horizontal cable jack to the Stratix.

Fiber Uplink

The Stratix has 2 SFP uplink ports that can accommodate 2 Fiber SFPs. Either Multi-mode or Single Mode SFPs can be used. Fiber uplinks can be brought into the zone enclosure via conduit, using fiber distribution cable or Panduit armored fiber, DCF, or PCF, as needed.

The fiber links are terminated inside the provided fiber Surface Mount Box (CBXF6BL-AY). The Surface Mount Box features internal slack management along with provided Panduit LC adapters (FADJAQLCZBL). Fibers will be terminated to LC connectors (Panduit Opticam FLCDMCXAQY recommended) not included. For instructions on Panduit LC termination, see instruction sheet *LC OptiCam Connector : FS014* available on at www.Panduit.com.

When armored fiber cable is used, the outer casing is connected to the enclosure using Panduit's Armored Cable Grounding Kit (See www.Panduit.com for the applicable part no.) The inner distribution cable is exposed and termined in the same manner as other distribution cable. If a metal clad armor casing is used, it will need to be grounded. See T-PMPI-292-PC for armor cable grounding details.

From the Surface Mount Box, the provided LC to LC duplex patch cords (FX2ERLNLNSNM001) are used to connect from the fiber adapter modules to the SFP LC uplink connectors on the switch.

Fiber slack is stored in the included fiber spool that is mounted to the accessory plate in the zone enclosure with adhesive. It is important to wind the fiber patch cord slack on the spool to prevent sharp bends or snag that can degrade transmission.