THIS COPY IS PROVIDED ON A RESTRICTED BASIS AND IS NOT TO BE USED IN ANY WAY DETRIMENTAL TO THE INTERESTS OF PANDUIT CORP.

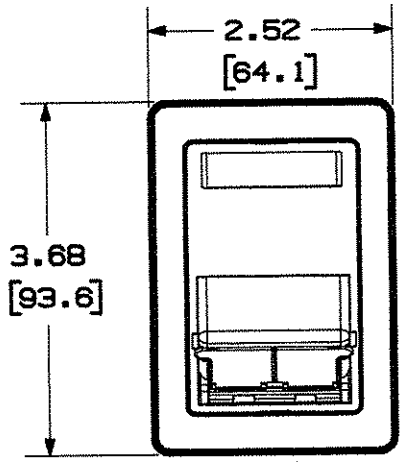

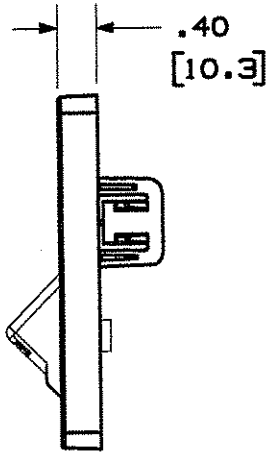

PANDUIT P/N	WEIGHT
CFPDPS2S**	.07 LB/EACH (30.0 G/EACH)

NOTES:
1. SEE CURRENT CATALOG FOR ADDITIONAL PART SUFFIXES TO INDICATE COLOR AND OR PACKAGE QUANTITY.
2. FOR USE WITH ALL MINI-COM MODULES AND STANDARD DENMARK JUNCTION BOXES.
3. DIMENSIONS IN PARENTHESIS ARE IN METRIC.
4. THIS PRODUCT INCLUDES ALL COMPONENTS ILLUSTRATED BELOW.

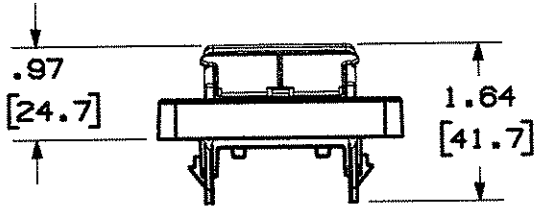

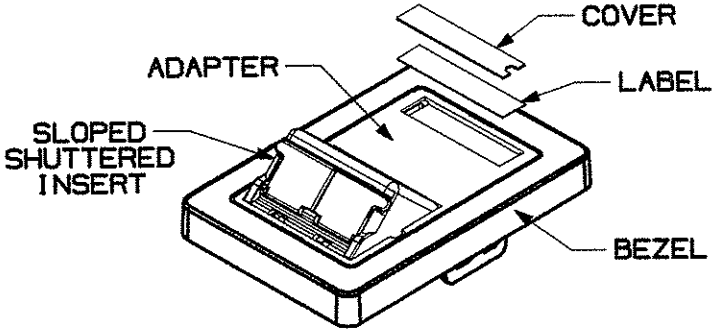

REV	DATE	BY	CHK	DESCRIPTION	ECN - R	CUST	SUP
R	7-1-99	JBA	MECA	RELEASED TO PRODUCTION	00142-22		

CAD FILENAME/LAYERS: M00142BT_DC_00A.PRT

PANDUIT CORP. TINLEY PARK, ILLINOIS

DENMARK SLOPED/SHUTTERED INSERT FACEPLATE (CFPDPS2S**) CUSTOMER DRAWING

UNLESS OTHERWISE SPECIFIED, DIMENSIONAL TOLERANCES ARE:
(.X) ± (.XXX) ± .010(.3)
(.XX) ± .03(.8) ANGLES ±

UNLESS OTHERWISE SPECIFIED, ALL DIMENSIONS ARE GIVEN IN INCHES, THIRD ANGLE PROJECTION.

DRAWN BY: JBA
DATE: 7-1-99
CHK'D: MECA
MAT'L: ABS
SCALE: NONE
DRAWING NO.: 00142-22
DWG SIZE: A