THIS COPY IS PROVIDED ON A RESTRICTED BASIS AND IS NOT TO BE USED IN ANY WAY DETRIMENTAL TO THE INTERESTS OF PANDUIT CORP.

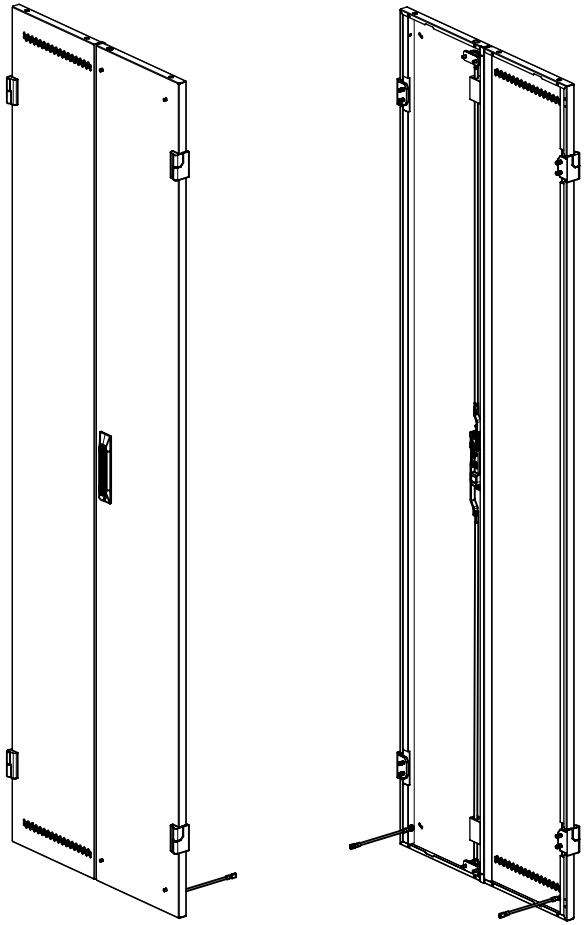

PANDUIT PART NO.	DESCRIPTION	WEIGHT
D62RDE*	D-TYPE SPLIT REAR DOOR ENHANCED 600mm WIDE X 42RU	15.75 Kg/EACH (34.72 LBS/EACH)
D65RDE*	D-TYPE SPLIT REAR DOOR ENHANCED 600mm WIDE X 45RU	16.75 Kg/EACH (36.93 LBS/EACH)
D68RDE*	D-TYPE SPLIT REAR DOOR ENHANCED 600mm WIDE X 48RU	17.75 Kg/EACH (39.13 LBS/EACH)
D82RDE*	D-TYPE SPLIT REAR DOOR ENHANCED 800mm WIDE X 42RU	17.75 Kg/EACH (39.13 LBS/EACH)
D85RDE*	D-TYPE SPLIT REAR DOOR ENHANCED 800mm WIDE X 45RU	18.75 Kg/EACH (41.34 LBS/EACH)
D88RDE*	D-TYPE SPLIT REAR DOOR ENHANCED 800mm WIDE X 48RU	19.75 Kg/EACH (43.54 LBS/EACH)

NOTE:
* DENOTES COLOR - ADD SUFFIX "B" FOR BLACK AND "W" FOR WHITE

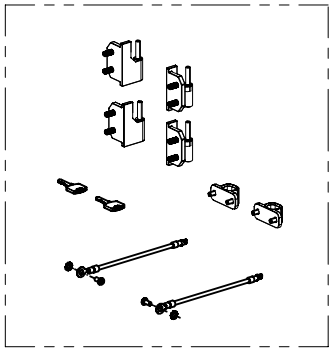

HARDWARE (PACKAGED)

NOTES:
1. VISIT OUR ON-LINE CATALOG AT WWW.PANDUIT.COM FOR A LIST OF CURRENT PARTS APPLICABLE FOR USE WITH THIS PRODUCT.
2. PRIMARY DIMENSIONS ARE IN MILLIMETERS (mm).
3. PARTS SUPPLIED:
   (1)- SET OF SPLIT DOORS WITH FEMALE HINGES AND GROUND WHIPS INSTALLED
   (1)- HARDWARE KIT: HINGES, GROUNDING WHIPS MOUNTING HARDWARE
   (1)- INSTRUCTION SHEET

REV	DATE	BY	CHK	APR	DESCRIPTION	ECN
00A	11-25-19	MES	PATR	SJP	RELEASED TO PRODUCTION	V09002DP

TITLE
D-TYPE SPLIT REAR DOOR ENHANCED D**RDE*
CUSTOMER DRAWING

ITEM REVISION NAME: 00568EAH/00
DATASET FILE NAME: 00568EAH_DC/00A

PANDUIT

MATERIAL: N/A

THIRD ANGLE PROJECTION

DRAWING NUMBER: 00568EAH-DC

DRAWN BY	DATE	CHK	SCALE	SHT 1 OF 2	SIZE
MES	11-25-19	PATR	NONE		A

D10100DA/20

THIS COPY IS PROVIDED ON A RESTRICTED BASIS AND IS NOT TO BE USED IN ANY WAY DETRIMENTAL TO THE INTERESTS OF PANDUIT CORP.

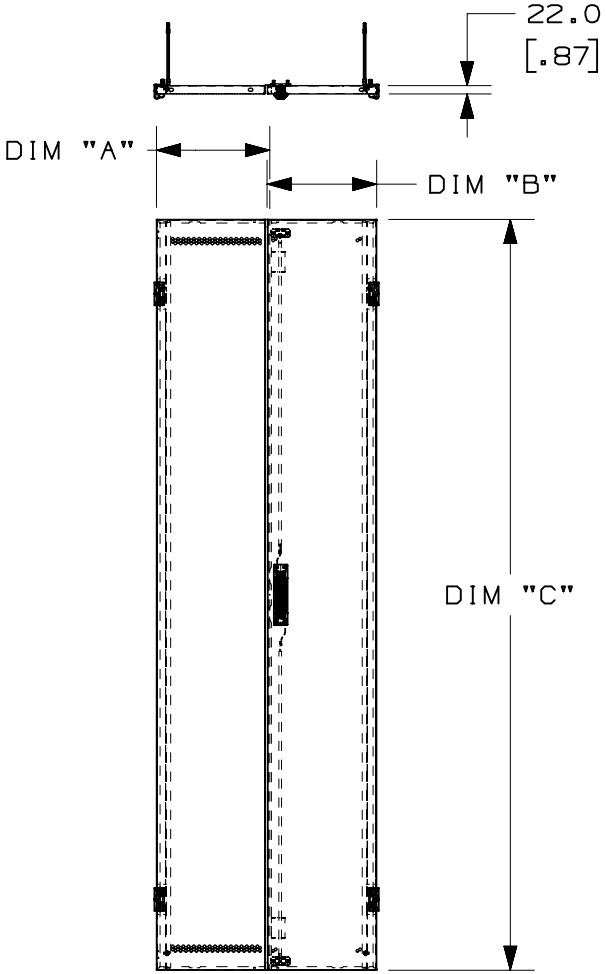

PANDUIT PART NO.	DESCRIPTION	DIM "A"	DIM "B"	DIM "C"
D62RDE*	D-TYPE SPLIT REAR DOOR ENHANCED 600mm WIDE X 42RU	290.1 [11.42]	301.0 [11.85]	1986.0 [78.19]
D65RDE*	D-TYPE SPLIT REAR DOOR ENHANCED 600mm WIDE X 45RU	290.1 [11.42]	301.0 [11.85]	2119.0 [83.42]
D68RDE*	D-TYPE SPLIT REAR DOOR ENHANCED 600mm WIDE X 48RU	290.1 [11.42]	301.0 [11.85]	2253.2 [88.71]
D82RDE*	D-TYPE SPLIT REAR DOOR ENHANCED 800mm WIDE X 42RU	390.1 [15.36]	401.0 [15.79]	1986.0 [78.19]
D85RDE*	D-TYPE SPLIT REAR DOOR ENHANCED 800mm WIDE X 45RU	390.1 [15.36]	401.0 [15.79]	2119.0 [83.42]
D88RDE*	D-TYPE SPLIT REAR DOOR ENHANCED 800mm WIDE X 48RU	390.1 [15.36]	401.0 [15.79]	2253.2 [88.71]

REV	DATE	BY	CHK	APR	DESCRIPTION	ECN
00A	11-25-19	MES	PATR	SJP	SEE SHEET 1 FOR REVISIONS	V09002DP

TITLE

D-TYPE SPLIT REAR DOOR ENHANCED D**RDE*

CUSTOMER DRAWING

ITEM REVISION NAME: 00568EAH/00

DATASET FILE NAME: 00568EAH_DC/00A

PANDUIT

MATERIAL: N/A

THIRD ANGLE PROJECTION

DRAWING NUMBER: 00568EAH-DC

DRAWN BY	DATE	CHK	SCALE	SHT 2 OF 2	SIZE
MES	11-2-19	PATR	NONE		A

D10100DA/20