THIS COPY IS PROVIDED ON A RESTRICTED BASIS AND IS NOT TO BE USED IN ANY WAY DETRIMENTAL TO THE INTERESTS OF PANDUIT CORP.

PANDUIT PART NO.	WEIGHT
DIFBA3003S00S	9.2 LBS/EACH

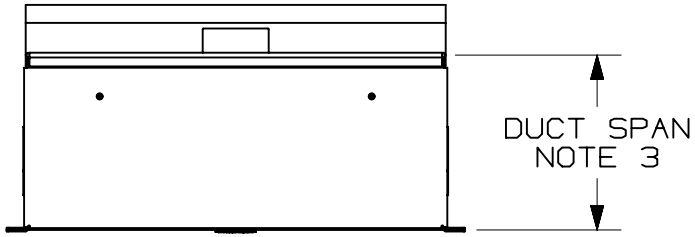

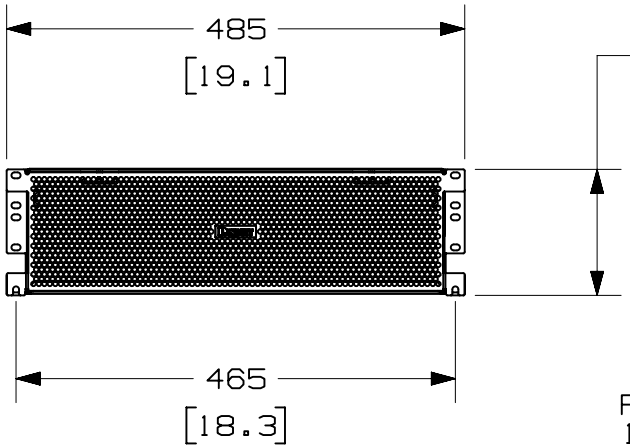

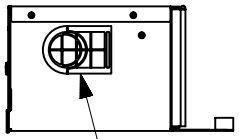

NOTES:
1. PRIMARY DIMENSIONS ARE MILLIMETERS (mm). DIMENSIONS IN PARENTHESES ARE IN INCHES (IN)
2. PARTS SUPPLIED
   1 - 3 RU DUCT
   1 - FRONT PERF PLATE
   1 - HARDWARE KIT
3. SLIDE BRACKET EXTENDS TO PROVIDE A SPAN (WITH CONSIDERATION FOR SEALS) OF 175.6mm [6.91"] - 200.9mm [7.91"] TO ACCOMODATE A SWITCH MOUNTING DEPTH OF 29" TO 30".
4. 2 RUBBER GROMMETS (1 ON EACH SIDE) PROVIDED FOR EASY ACCESS TO POWER.

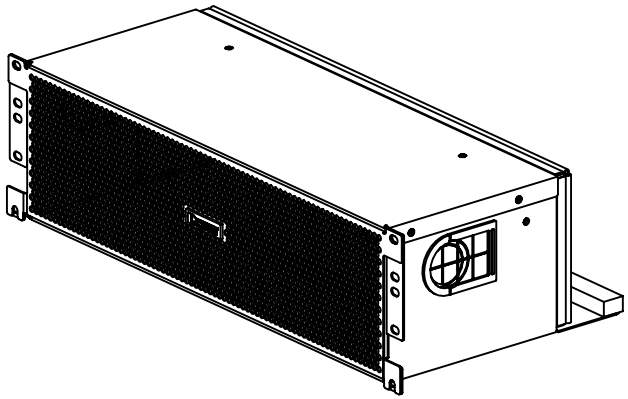

REV	DATE	BY	CHK	APR	DESCRIPTION	ECN
00A	8/29/14	TGO			RELEASED	10V168WZ

TITLE
INLET DUCTING FOR CISCO 93128 SWITCH
DIFBA3003S00S
CONTROL DRAWING

ITEM REVISION NAME: 10V168WZ/00

DATASET FILE NAME: 10V168WZ_DC/00A

PANDUIT

MATERIAL: N/A

THIRD ANGLE PROJECTION

DRAWING NUMBER: 10V168WZ-DC

DRAWN BY	DATE	CHK	SCALE	SHT 1 OF 1	SIZE
TGO	08/29/14		NONE		A