THIS COPY IS PROVIDED ON A RESTRICTED BASIS AND IS NOT TO BE USED IN ANY WAY DETRIMENTAL TO THE INTERESTS OF PANDUIT CORP.

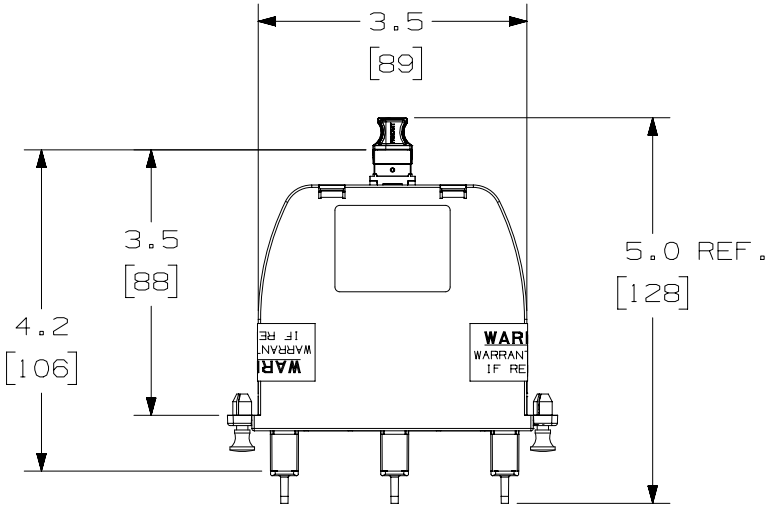

NOTES:
1. SEE CURRENT CATALOG FOR PART NUMBER SUFFIXES TO INDICATE COLOR AND/OR PACKAGE QUANTITIES.
2. SEE CATALOG FOR COMPLETE LIST OF PARTS APPLICABLE FOR USE WITH THIS PRODUCT.
3. PART NUMBERS: SEE SHEET 2 FOR METHOD A.
4. METHOD A CASSETTES COMPLY WITH ANSI/TIA-568-C.0. SEE ANSI/TIA-568-C.0 FOR POLARITY DETAILS AND EXAMPLE OF A BASIC LINK.
5. MATERIALS:
   A. BOX AND LID: PLASTIC
   B. ADAPTER: COMPOSITE PLASTIC
6. CASSETTE WEIGHT: 3.95oz [112g]
7. DIMENSIONS IN BRACKETS ARE METRIC.

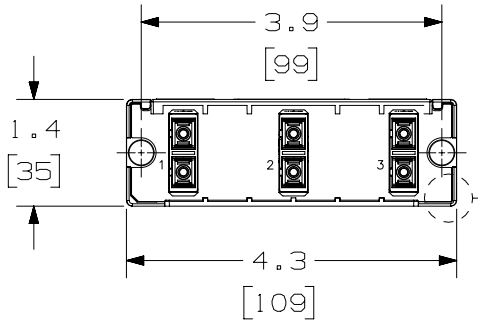

SEE SHEETS 2 FOR ARTWORK DETAILS

FRONT VIEW

SHOWN W/O DUSTCAPS

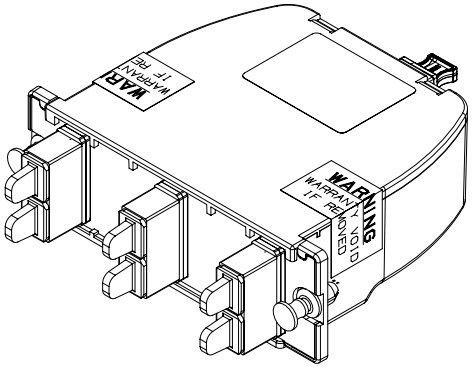

REV	DATE	BY	CHK	APR	DESCRIPTION	ECN
03A	03-08-23	SAT	TMSE	KYLM	INITIAL RELEASE	10F113AE-DC-06

TITLE
6 FIBER DUPLEX SC CASSETTE
METHOD A
CUSTOMER DRAWING

ITEM REVISION NAME: 10F113AC/03

DATASET FILE NAME: 10F113AC_DC-06/03A

UNLESS OTHERWISE SPECIFIED, DIMENSIONAL TOLERANCES ARE: IN [mm]
.X ± .03 [.8] .XXX ± .005 [.127]
.XX ± .01 [.25] ANGLES ± 5 °
THIRD ANGLE PROJECTION

MATERIAL: SEE NOTES

DRAWING NUMBER: 10F113AC-DC-06

DRAWN BY	DATE	CHK	SCALE	SHT 1 OF 2	SIZE
SAT	03-08-23	TMSE	NONE		A

THIS COPY IS PROVIDED ON A RESTRICTED BASIS AND IS NOT TO BE USED IN ANY WAY DETRIMENTAL TO THE INTERESTS OF PANDUIT CORP.

6 FIBER DUPLEX SC CASSETTE - METHOD A	
PART NUMBER	DESCRIPTION
FC29N-06-03AS	6 FIBER 9/125um OS1/OS2

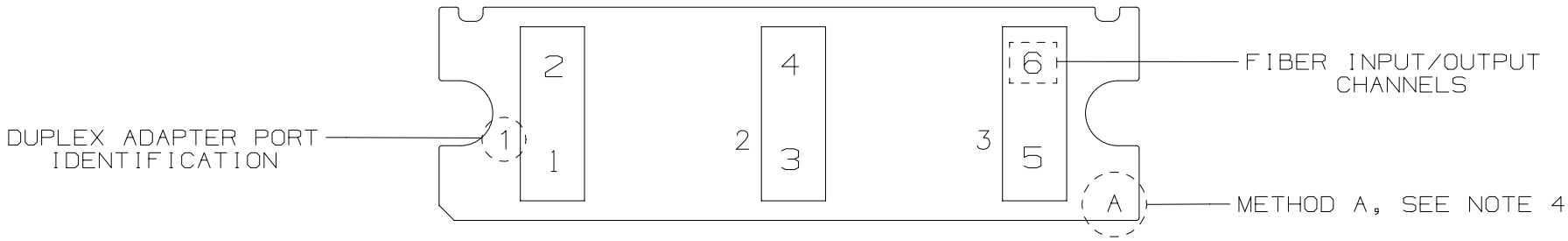

METHOD A - FIBER LAYOUT

REV	DATE	BY	CHK	APR	DESCRIPTION	ECN
					SEE SHEET 1 FOR REVISION HISTORY	

TITLE
6 FIBER DUPLEX SC CASSETTE
METHOD A
CUSTOMER DRAWING

ITEM REVISION NAME: 10F113AC/03

DATASET FILE NAME: 10F113AC_DC-06/03A

UNLESS OTHERWISE SPECIFIED, DIMENSIONAL TOLERANCES ARE: IN [mm]
.X ± .03 [.8] .XXX ± .005 [.127]
.XX ± .01 [.25] ANGLES ± 5 °
THIRD ANGLE PROJECTION

MATERIAL: SEE NOTES SHEET 1

DRAWING NUMBER: 10F113AC-DC-06

DRAWN BY	DATE	CHK	SCALE		SIZE
SAT	03-08-23	TMSE	NONE	SHT 2 OF 2	A