THIS COPY IS PROVIDED ON A RESTRICTED BASIS AND IS NOT TO BE USED IN ANY WAY DETRIMENTAL TO THE INTERESTS OF PANDUIT CORP.

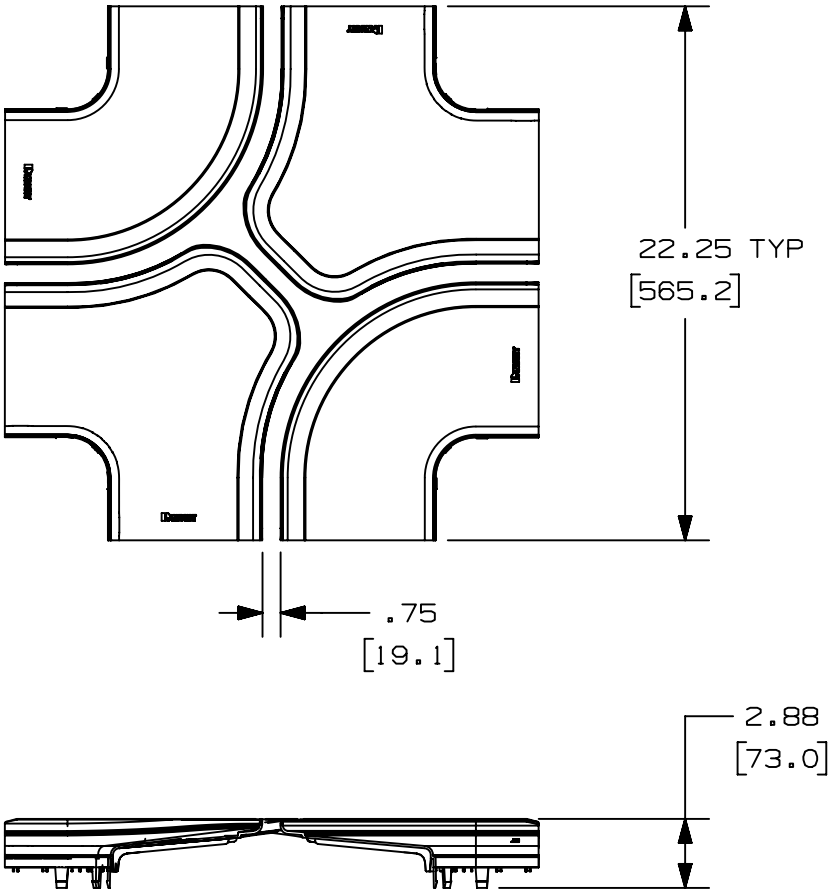

PANDUIT PART NUMBER	WEIGHT	MATERIAL
FRFWCSC12	2.10 LB/EACH (952g/EACH)	ABS
FRFWCSC12L	2.10 LB/EACH (952g/EACH)	PC/ABS

NOTES:

1. SEE CURRENT CATALOG FOR ADDITIONAL PART SUFFIXES TO INDICATE COLOR AND/OR PACKAGE QUANTITY.
2. THE FIBERRUNNER 12x4 FOUR-WAY CROSS SPLIT COVER REQUIRES NO TOOLS FOR INSTALLATION AND/OR REMOVAL. THE SPLIT COVER CREATES A 3/4" (19.1) RADIUSED OPENING TO ALLOW FOR NEW CABLES TO BE ADDED WITHOUT THE NEED FOR REMOVING THE COVERS.
3. DIMENSIONS IN PARENTHESES ARE IN METRIC.

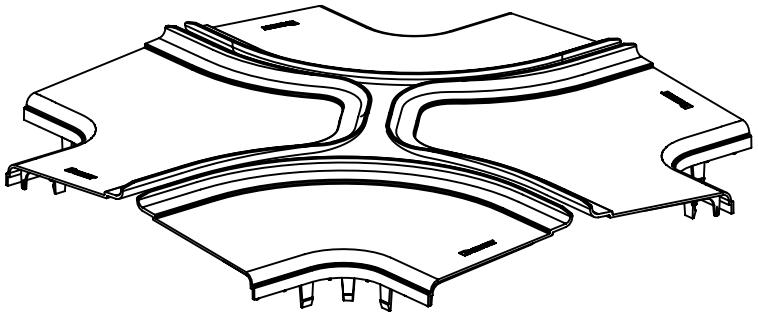

REV	DATE	BY	CHK	APR	DESCRIPTION	ECN
01B	9/1/2020	MES	DWR	DWR	UPDATED TITLE BLOCK, ADDED NEW PART NUMBER	V09002DZ/11

TITLE
FIBERRUNNER 12x4 FOUR-WAY CROSS SPLIT COVER (FRFWCSC12, FRFWCSC12L)
CONTROL DRAWING

ITEM REVISION NAME: D37617DQ/01

DATASET FILE NAME: D37617DQ/01

UNLESS OTHERWISE SPECIFIED, DIMENSIONAL TOLERANCES ARE:
(.X) ± (.XX) ±.03 (.8) (.XXX) ± ANGLES ±

THIRD ANGLE PROJECTION

MATERIAL: SEE PART NUMBER TABLE ABOVE

DRAWING NUMBER: 37617-74

DRAWN BY	DATE	CHK	SCALE	SHT 1 OF 1	SIZE
JHNU	1-13-01	HIW	NONE		A

D10100DA/20