FIBER ROUTING 4-POST RACK BRACKET 5/8" THREADED ROD FOR USE WITH PANDUIT FIBER-DUCT AND FIBERRUNNER CABLE ROUTING SYSTEMS

Part Number(s): FR4PRB58

© Panduit Corp. 2014

INSTALLATION INSTRUCTIONS

RW190

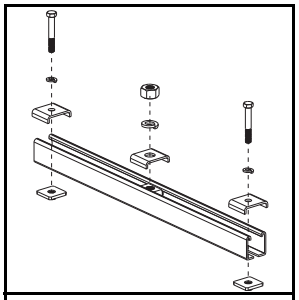

FR4PRB58

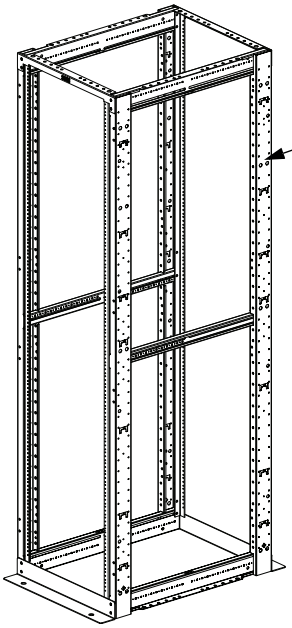

Top View - R4P*

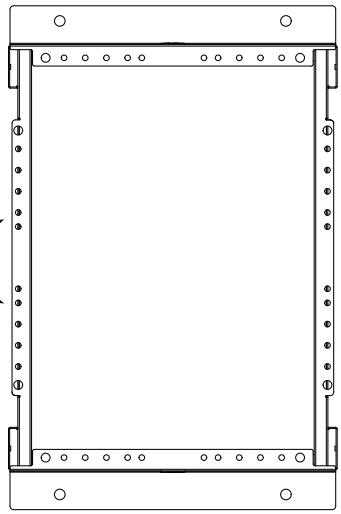

Typical Installation

1

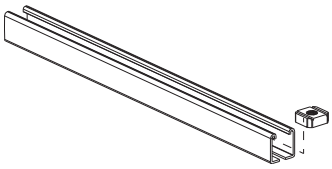

2

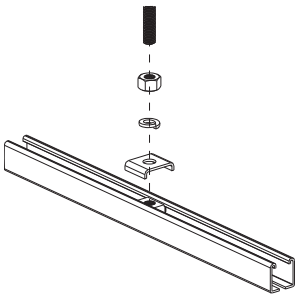

3

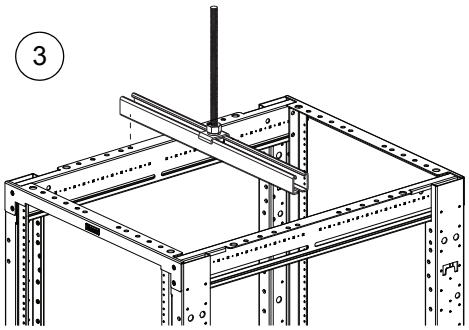

4

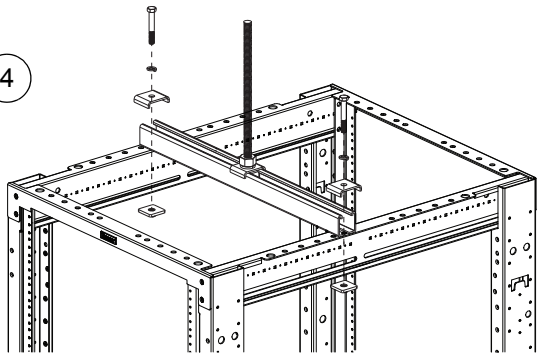

5

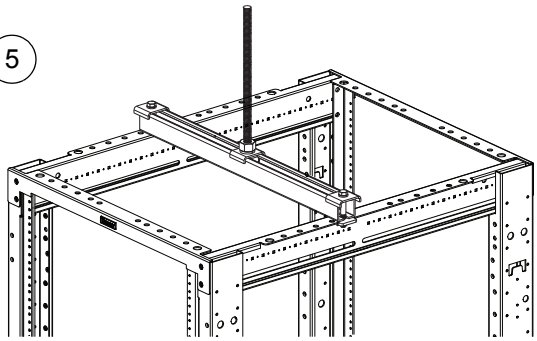

For Instructions in Local Languages and Technical Support:

www.panduit.com/resources/install_maintain.asp

www.panduit.com

E-mail:
techsupport@panduit.com

Phone:
866-405-6654

Rev. 04