FIBER-DUCT MOUNTING BRACKETS FOR USE WITH PANDUIT FIBER-DUCT ROUTING SYSTEMS

Part Number(s): FLRB, FLB, FTRBE12, FTRBE12M, FTRBE58, FTRBN12, FTRB12M, FTRBN58

© Panduit Corp. 2013

INSTALLATION INSTRUCTIONS

RW52C

Printed in U.S.A.

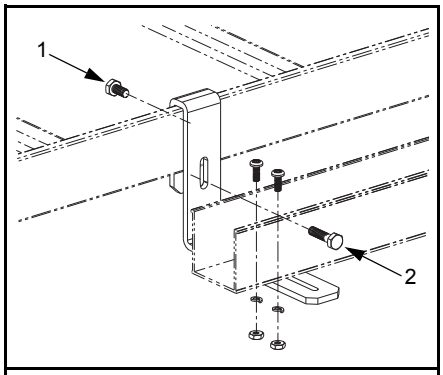

FLRB

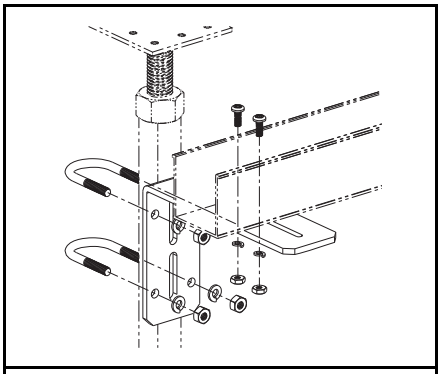

FUSB

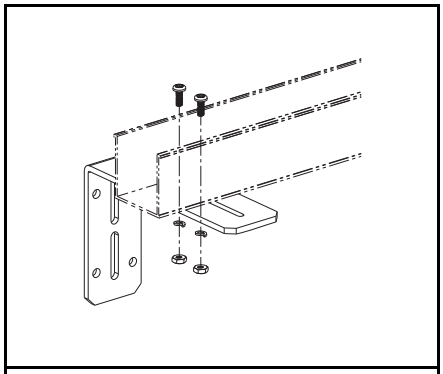

FLB

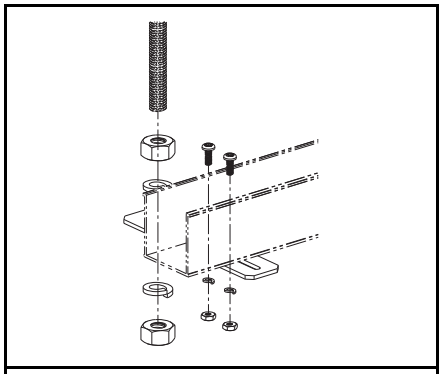

FTRBN12, FTRBN12M, FTRBN58

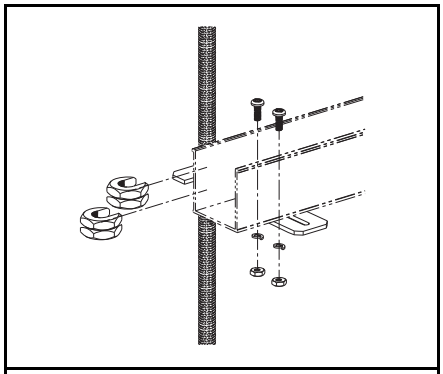

FTRBE12, FTRBE12M, FTRBE58

For Instructions in Local Languages and Technical Support:

www.panduit.com/resources/install_maintain.asp

www.panduit.com

E-mail:
techsupport@panduit.com

Fax:
866-405-6654

FIBER-DUCT MOUNTING BRACKETS FOR USE WITH PANDUIT FIBER-DUCT ROUTING SYSTEMS

Part Number(s): FLRB, FLB, FTRBE12, FTRBE12M, FTRBE58, FTRBN12, FTRB12M, FTRBN58

© Panduit Corp. 2013

INSTALLATION INSTRUCTIONS

RW52C

Printed in U.S.A.

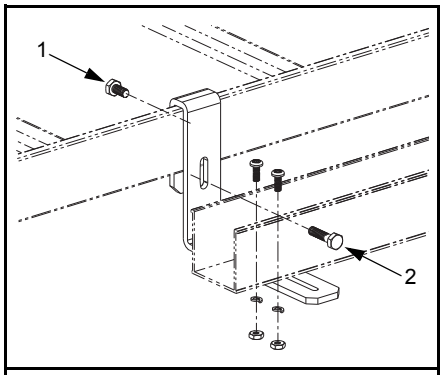

FLRB

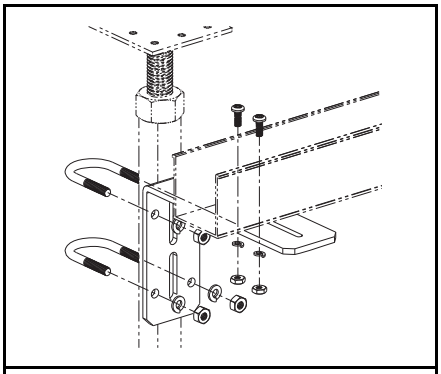

FUSB

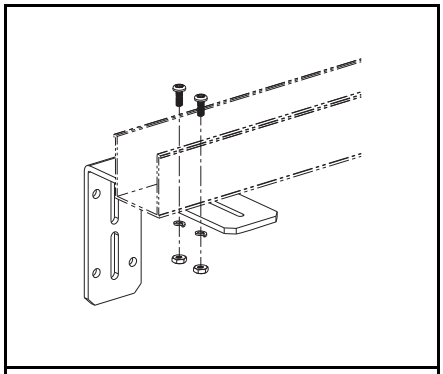

FLB

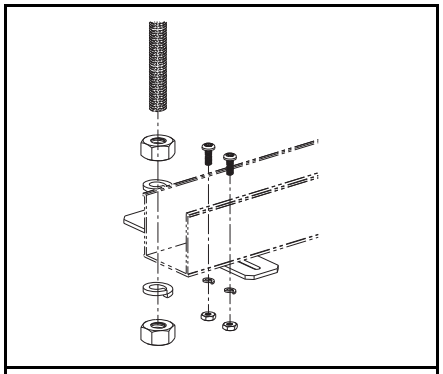

FTRBN12, FTRBN12M, FTRBN58

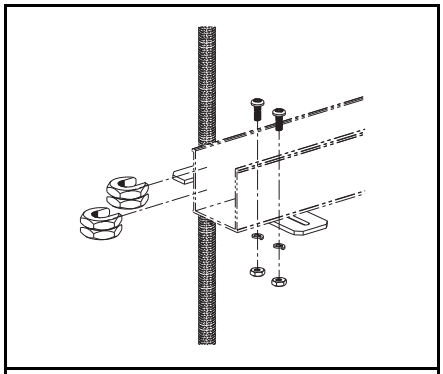

FTRBE12, FTRBE12M, FTRBE58

For Instructions in Local Languages and Technical Support:

www.panduit.com/resources/install_maintain.asp

www.panduit.com

E-mail:
techsupport@panduit.com

Fax:
866-405-6654