THIS COPY IS PROVIDED ON A RESTRICTED BASIS AND IS NOT TO BE USED IN ANY WAY DETRIMENTAL TO THE INTERESTS OF PANDUIT CORP.

PANDUIT P/N	WEIGHT
PZNF1	.04 LBS EACH (18.1g EACH)

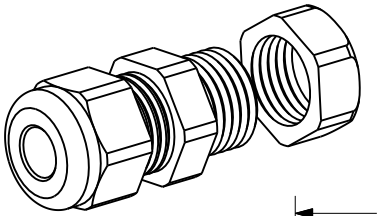

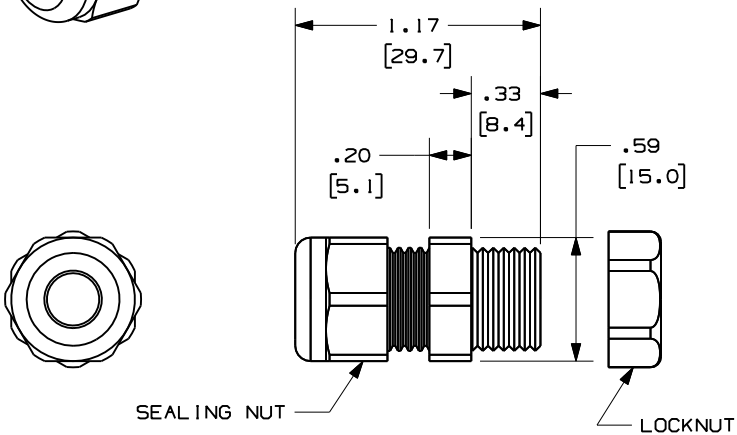

NOTES:
1. SEE CURRENT CATALOG FOR COMPLETE LIST OF PARTS APPLICABLE FOR USE WITH THIS PRODUCT.
2. DIMENSIONS IN PARENTHESES ARE IN METRIC.
3. KIT INCLUDES:
   1 - LIQUID TIGHT NEMA 4X FITTING
   1 - SILICONE SEALANT PACK
   1 - APPLICATION STICK

MODEL FILENAME: V10396BC_HEYCO-3208_00.prt

CAD FILENAME/LAYERS: V10396BC_DC_00A.prt (1)

PANDUIT CORP. TINLEY PARK, ILLINOIS

PANZONE™ NEMA 4X FITTING KIT (PZNF1) (.114" - .250") DIA CABLE RANGE CUSTOMER DRAWING

UNLESS OTHERWISE SPECIFIED, DIMENSIONAL TOLERANCES ARE:
(.X) ± .03 (.XXX) ± .005
(.XX) ± .01 ANGLES ± 1°

UNLESS OTHERWISE SPECIFIED, ALL DIMENSIONS ARE GIVEN IN INCHES. THIRD ANGLE PROJECTION.

DRAWN BY: RYB

DATE: 2/19/07

CHK'D:

MAT'L: NYLON

SCALE: 1.5X

DRAWING NO.: 10396-12

DWG SIZE: A

REV	DATE	BY	CHK	DESCRIPTION	ECN - R	CUST	SUP	OTH
00	2/19/07	RYB		RELEASED TO PRODUCTION	10396-12			