THIS COPY IS PROVIDED ON A RESTRICTED BASIS AND IS NOT TO BE USED IN ANY WAY DETRIMENTAL TO THE INTERESTS OF PANDUIT CORP.

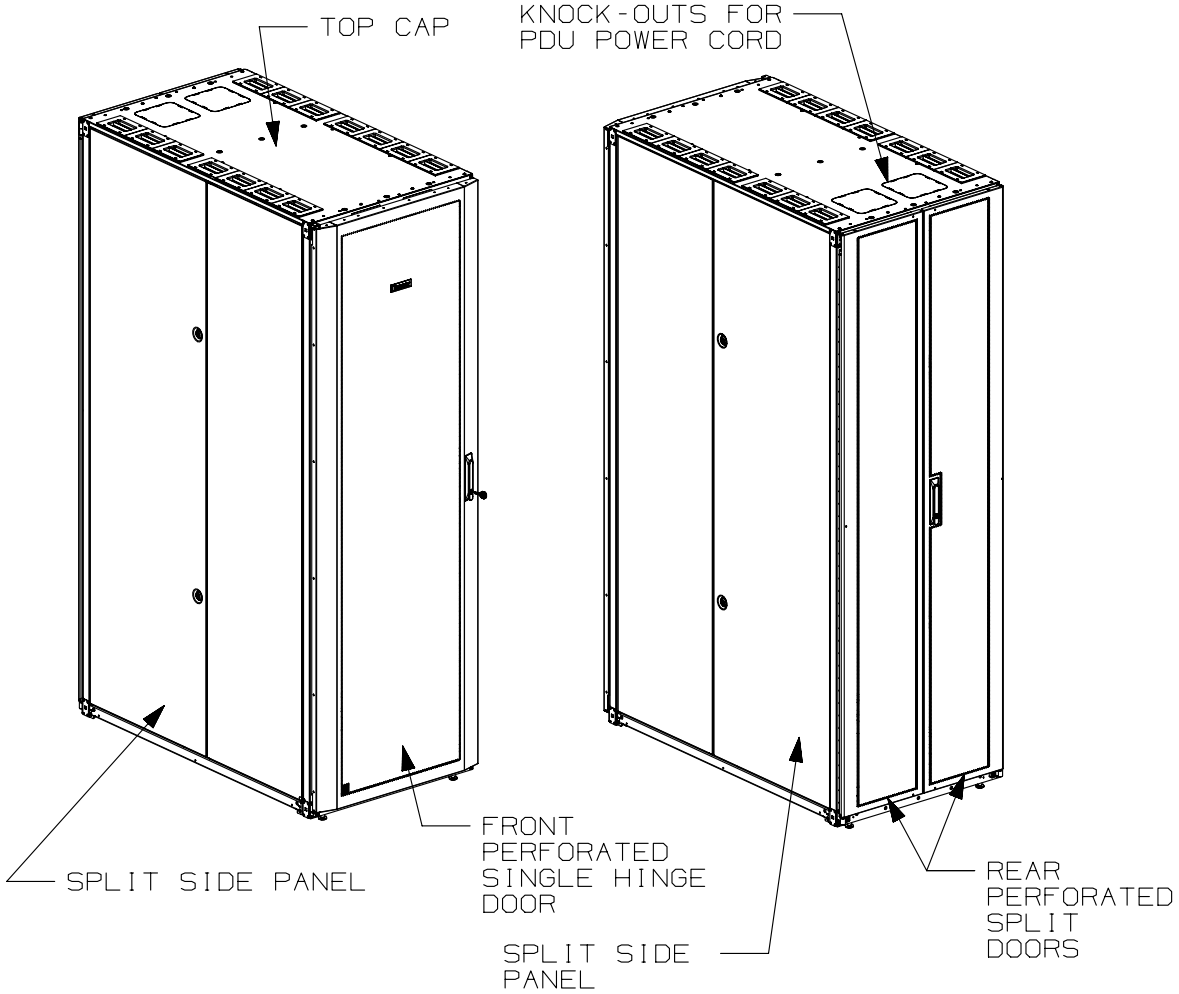

1. VISIT OUR ON-LINE CATALOG AT WWW.PANDUIT.COM FOR A LIST OF CURRENT PARTS APPLICABLE FOR USE WITH THIS PRODUCT.
2. PRIMARY DIMENSIONS ARE IN MILLIMETERS.
3. RAIL ADJUSTMENT MEASUREMENTS ARE TAKEN FROM THE FRONT FACE OF EACH EQUIPMENT RAIL. INDEPENDENT ADJUSTABLE REAR EQUIPMENT MOUNTING RAILS (EIA) ADJUST FROM 141mm [5.5in] TO 532mm [20.9in] AND FROM 583mm [22.9in] TO 1085mm [42.7in] WITH PDU BRACKETS AND CABLE MANAGEMENT FINGERS IN PLACE.
4. CAN BE USED WITH ANY 19" EIA STANDARD COMPONENT IN ADDITION TO ALL PANDUIT HORIZONTAL CABLE MANAGEMENT AND PATCH PANEL PRODUCTS.
5. EIA UNIVERSAL STANDARD HOLE PROGRESSION ON EQUIPMENT RAILS 15.88mm [.625in], 15.88mm [.625in], 12.70mm [.50in], 15.88mm [.625in], 15.88mm [.625in], 12.7mm [.50in]...ETC.
6. PARTS SUPPLIED:
   - BASE CABINET
   - FRONT PERFORATED SINGLE HINGE DOOR (SEE CHART ON SHEET 2)
   - REAR PERFORATED SPLIT DOOR (SEE CHART ON SHEET 2)
   - EQUIPMENT RAILS FRONT & REAR (SEE CHART ON SHEET 2)
   - PDU BRACKETS (SEE CHART ON SHEET 2)
   - INSTRUCTION SHEET
7. RACK UNIT SPACING NUMERALS ARE CLEARLY PRINTED ON EQUIPMENT MOUNTING RAILS.
8. FULLY BONDED STRUCTURE WHEN ASSEMBLED PER INSTRUCTIONS.
9. STATIC LOAD RATING. 1360 Kg(3000 LBS)
10. ROLLING LOAD RATING. 1133 Kg (2500 LBS)
11. SINGLE POINT GROUND LOCATIONS AT TOP AND BOTTOM OF CABINET.
12. ALL CABINET RAILS ARE INSTALLED NUMBERS UP.
13. MAXIMUM EQUIPMENT DEPTH, 1111mm [43.75in].

REV	DATE	BY	CHK	APR	DESCRIPTION	ECN
01A	9-26-14	PBS	ADP	TCN	FLOOR MOUNT DIMENSIONS UPDATED	V09000BX
00A	6-03-13	MDCA	NAGL	JDWE	RELEASED TO PRODUCTION	12V352BH-DC

TITLE
NET-ACCESS S TYPE CABINET W/O CASTERS
700mm WIDE X 1200mm DEEP FAMILY

CUSTOMER DRAWING

ITEM REVISION NAME: 12V352BH/01.PRT

DATASET FILE NAME: 12V352BH_DC/01A.PRT

PANDUIT

MATERIAL: N/A

THIRD ANGLE PROJECTION

DRAWING NUMBER: 12V352BH-DC

DRAWN BY	DATE	CHK	SCALE		SIZE
MDCA	6-03-13	NAGL	NONE	SHT 1 OF 5	A

THIS COPY IS PROVIDED ON A RESTRICTED BASIS AND IS NOT TO BE USED IN ANY WAY DETRIMENTAL TO THE INTERESTS OF PANDUIT CORP.

PART NO.	DESCRIPTION	SINGLE HINGE FRONT DOOR	SPLIT REAR DOOR	SPLIT SIDE PANEL	FRONT CAGE NUT E-RAIL	REAR CAGE NUT FINGER MGMT E-RAIL	REAR CAGE NUT VERTICAL PATCH E-RAIL	STANDARD POU BRACKETS	CASTERS	CABLE MGMT FINGERS	CABINET WEIGHT FULLY UNPACKAGED	CABINET WEIGHT SHIPPING WEIGHT
S7222*9	NET-ACCESS S-TYPE CABINET 700mm X 42RU X 1200mm DEEP	01	01	02	02	02	00	02	00	00	136 Kg/EACH 301 LBS/EACH	157 Kg/EACH 346 LBS/EACH
S7522*9	NET-ACCESS S-TYPE CABINET 700mm X 45RU X 1200mm DEEP	01	01	02	02	02	00	02	00	00	143 Kg/EACH 316 LBS/EACH	164 Kg/EACH 361 LBS/EACH
S7822*9	NET-ACCESS S-TYPE CABINET 700mm X 48RU X 1200mm DEEP	01	01	02	02	02	00	02	00	00	150 Kg/EACH 331 LBS/EACH	170 Kg/EACH 376 LBS/EACH
S7229*9	NET-ACCESS S-TYPE CABINET 700mm X 42RU X 1200mm DEEP	01	01	00	02	02	00	02	00	00	97 Kg/EACH 213 LBS/EACH	117 Kg/EACH 258 LBS/EACH
S7529*9	NET-ACCESS S-TYPE CABINET 700mm X 45RU X 1200mm DEEP	01	01	00	02	02	00	02	00	00	104 Kg/EACH 229 LBS/EACH	124 Kg/EACH 274 LBS/EACH
S7829*9	NET-ACCESS S-TYPE CABINET 700mm X 48RU X 1200mm DEEP	01	01	00	02	02	00	02	00	00	111 Kg/EACH 244 LBS/EACH	131 Kg/EACH 289 LBS/EACH

* DENOTES COLOR
""B"" = BLACK
""W"" = WHITE

REV	DATE	BY	CHK	APR	DESCRIPTION	ECN
01A	9-26-14	PBS	ADP	TCN	SEE SHEET 1 OF 5 FOR REVISIONS	V09000BX
00A	6-03-13	MDCA	NAGL	JDWE	SEE SHEET 1 OF 5 FOR REVISIONS	12V352BH-DC

TITLE
NET-ACCESS S TYPE CABINET W/O CASTERS
700mm WIDE X 1200mm DEEP FAMILY
CUSTOMER DRAWING

ITEM REVISION NAME: 12V352BH/01.PRT
DATASET FILE NAME: 12V352BH_DC/01A.PRT

PANDUIT

MATERIAL: N/A

THIRD ANGLE PROJECTION

DRAWING NUMBER: 12V352BH-DC

DRAWN BY	DATE	CHK	SCALE		SIZE
MDCA	6-03-13	NAGL	NONE	SHT 2 OF 5	A

THIS COPY IS PROVIDED ON A RESTRICTED BASIS AND IS NOT TO BE USED IN ANY WAY DETRIMENTAL TO THE INTERESTS OF PANDUIT CORP.

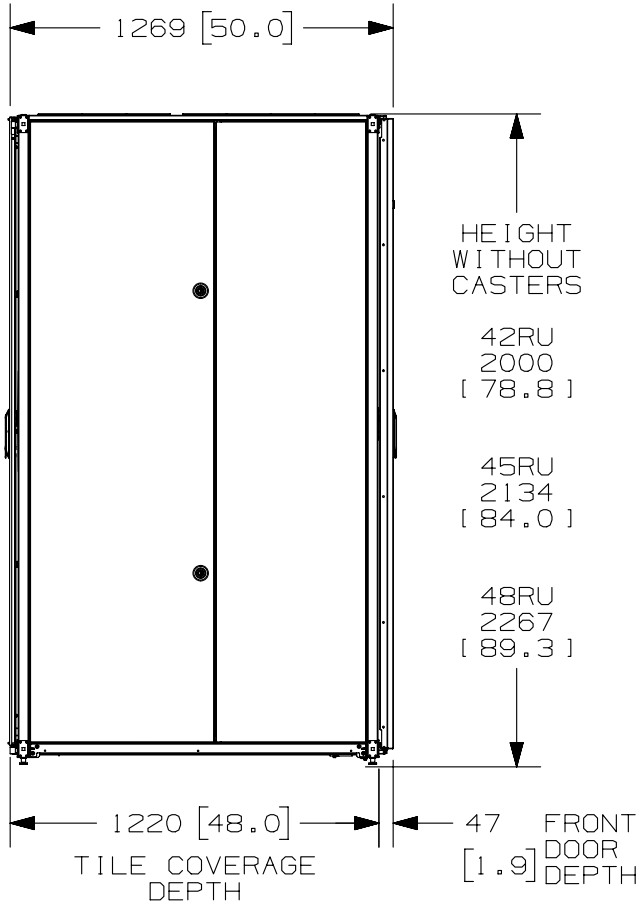

LEFT VIEW

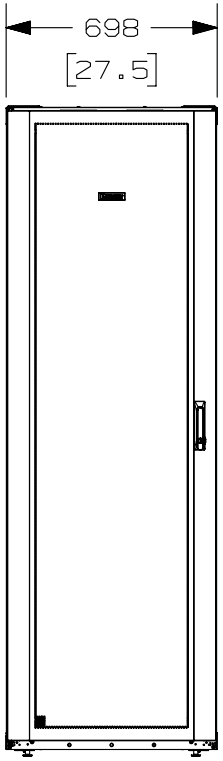

FRONT VIEW

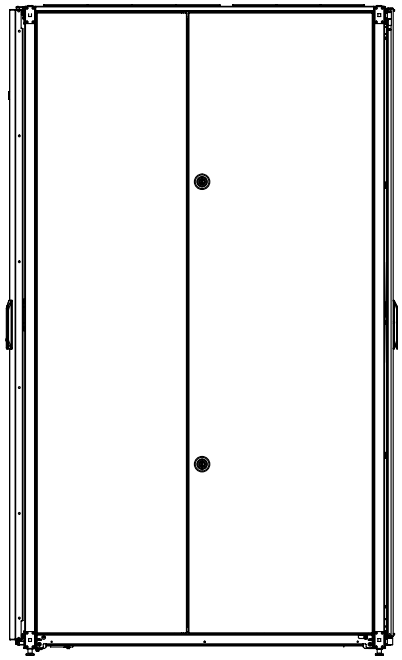

RIGHT VIEW

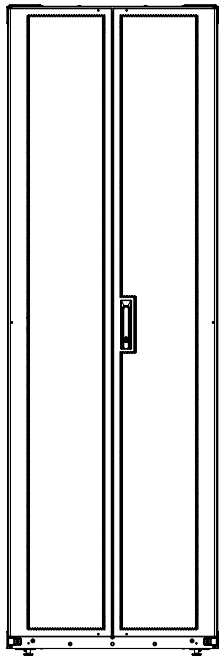

REAR VIEW

REV	DATE	BY	CHK	APR	DESCRIPTION	ECN
01A	9-26-14	PBS	ADP	TCN	SEE SHEET 1 OF 5 FOR REVISIONS	V09000BX
00A	6-03-13	MDCA	NAGL	JDWE	SEE SHEET 1 OF 5 FOR REVISIONS	12V352BH-DC

TITLE

NET-ACCESS S TYPE CABINET W/O CASTERS
700mm WIDE X 1200mm DEEP FAMILY

CUSTOMER DRAWING

ITEM REVISION NAME: 12V352BH/01.PRT

DATASET FILE NAME: 12V352BH_DC/01A.PRT

PANDUIT

MATERIAL: N/A

THIRD ANGLE PROJECTION

DRAWING NUMBER: 12V352BH-DC

DRAWN BY	DATE	CHK	SCALE		SIZE
MDCA	6-03-13	NAGL	NONE	SHT 3 OF 5	A

THIS COPY IS PROVIDED ON A RESTRICTED BASIS AND IS NOT TO BE USED IN ANY WAY DETRIMENTAL TO THE INTERESTS OF PANDUIT CORP.

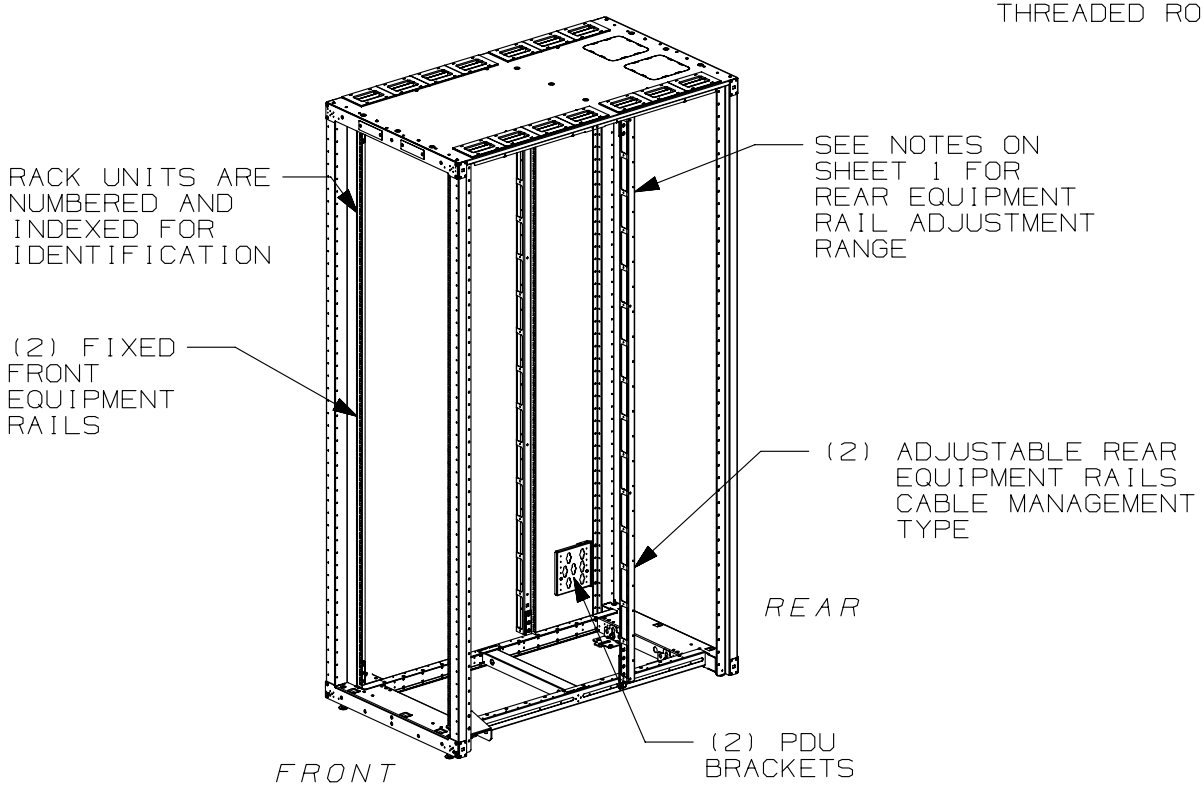

FRONT DOOR, REAR DOOR, AND SIDE PANELS NOT SHOWN

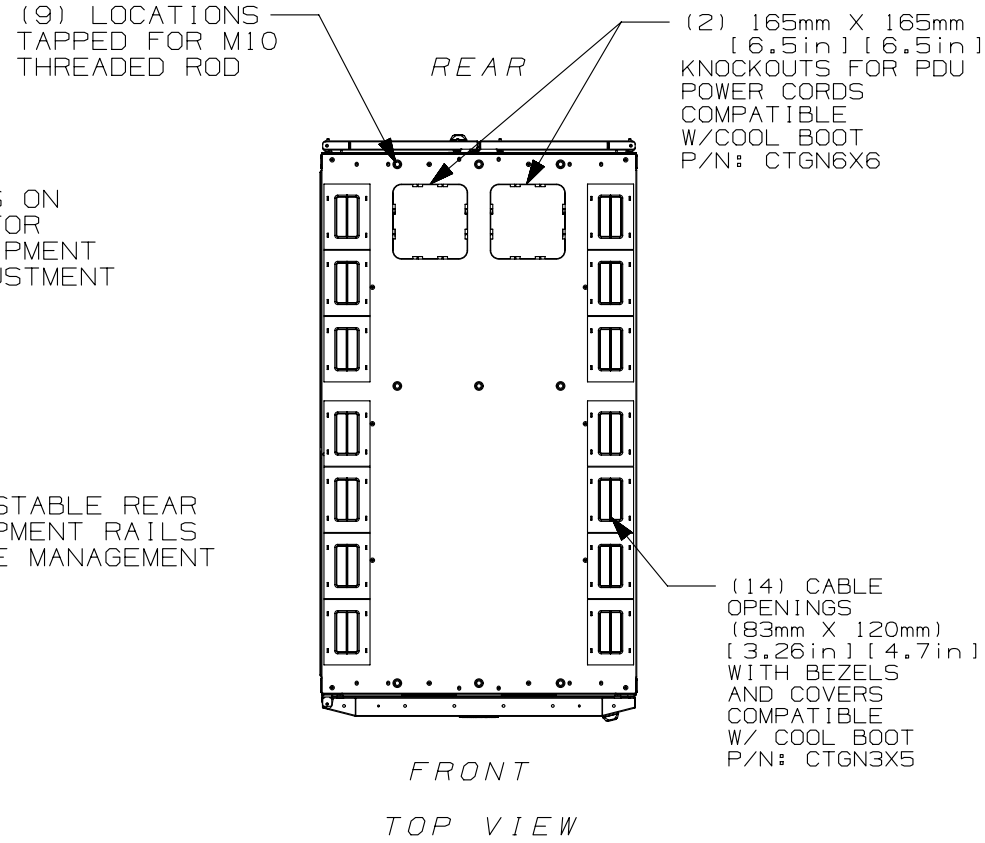

TOP VIEW

REV	DATE	BY	CHK	APR	DESCRIPTION	ECN
01A	9-26-14	PBS	ADP	TCN	SEE SHEET 1 OF 5 FOR REVISIONS	V09000BX
00A	6-03-13	MDCA	NAGL	JDWE	SEE SHEET 1 OF 5 FOR REVISIONS	12V352BH-DC

TITLE

NET-ACCESS S TYPE CABINET W/O CASTERS
700mm WIDE X 1200mm DEEP FAMILY

CUSTOMER DRAWING

ITEM REVISION NAME: 12V352BH/01.PRT

DATASET FILE NAME: 12V352BH_DC/01A.PRT

PANDUIT

MATERIAL: N/A

THIRD ANGLE PROJECTION

DRAWING NUMBER: 12V352BH-DC

DRAWN BY	DATE	CHK	SCALE		SIZE
MDCA	6-03-13	NAGL	NONE	SHT 4 OF 5	A

THIS COPY IS PROVIDED ON A RESTRICTED BASIS AND IS NOT TO BE USED IN ANY WAY DETRIMENTAL TO THE INTERESTS OF PANDUIT CORP.

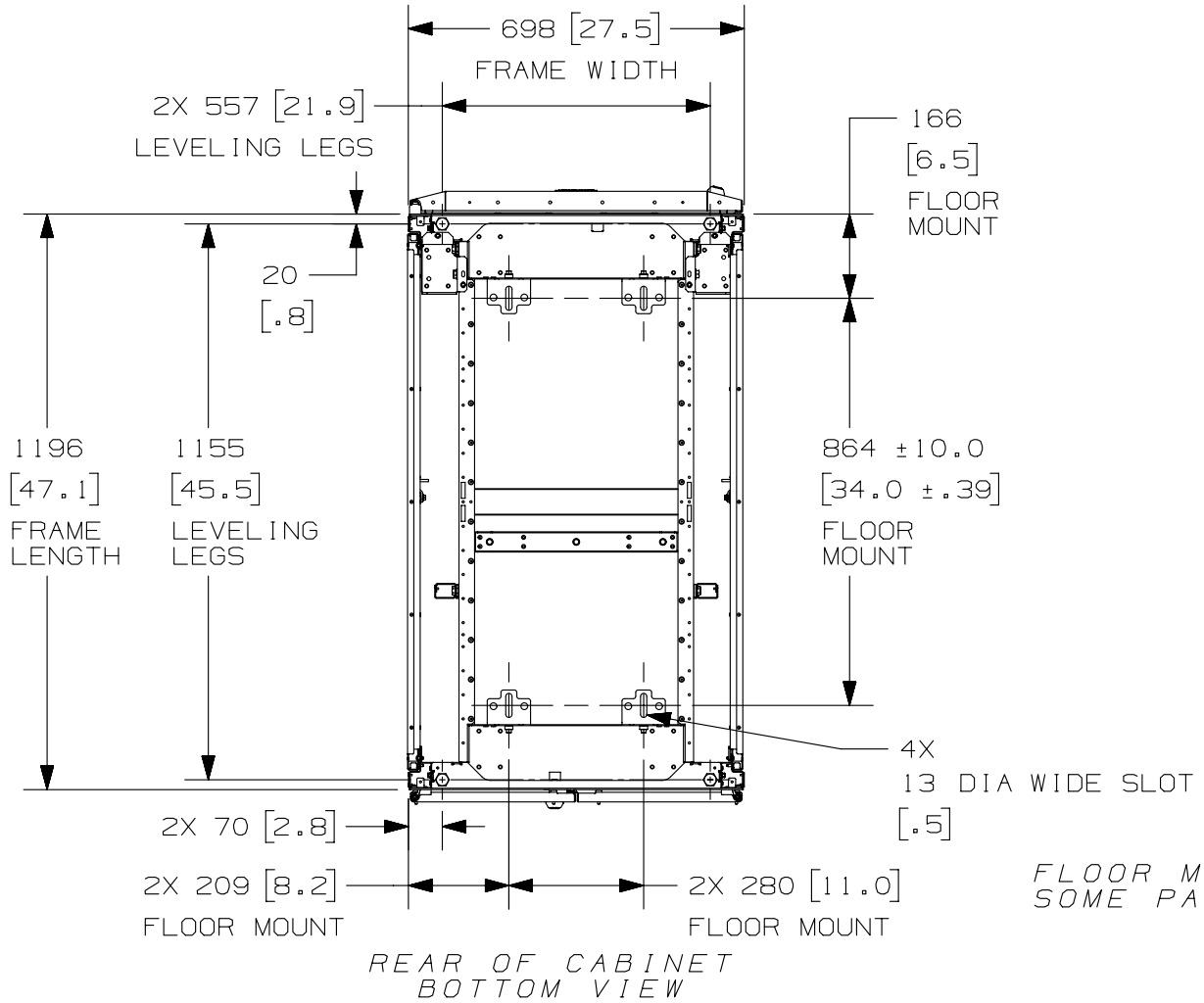

FLOOR MOUNTING HOLE LOCATIONS-
SOME PARTS REMOVED FOR CLARITY

REV	DATE	BY	CHK	APR	DESCRIPTION	ECN
01A	9-26-14	PBS	ADP	TCN	SEE SHEET 1 OF 5 FOR REVISIONS	V09000BX
00A	6-03-13	MDCA	NAGL	JDWE	SEE SHEET 1 OF 5 FOR REVISIONS	12V352BH-DC

TITLE

NET-ACCESS S TYPE CABINET W/O CASTERS
700mm WIDE X 1200mm DEEP FAMILY

CUSTOMER DRAWING

ITEM REVISION NAME: 12V352BH/01.PRT

DATASET FILE NAME: 12V352BH_DC/01A.PRT

PANDUIT

MATERIAL: N/A

THIRD ANGLE PROJECTION

DRAWING NUMBER: 12V352BH-DC

DRAWN BY	DATE	CHK	SCALE		SIZE
MDCA	6-03-13	NAGL	NONE	SHT 5 OF 5	A