FIBERRUNNER TO TELECT WAVE TRAX CABLE MANAGEMENT SYSTEM ADAPTERS FOR USE WITH PANDUIT FIBERRUNNER 4x4 AND 6x4 CABLE ROUTING SYSTEM

Part Number(s): FRTEL4**, FRTEL6**

© Panduit Corp. 2021

INSTALLATION INSTRUCTIONS

RW203

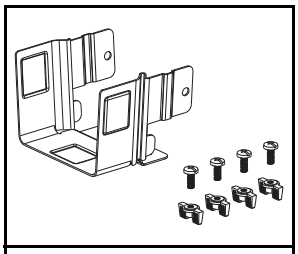

FRTEL4

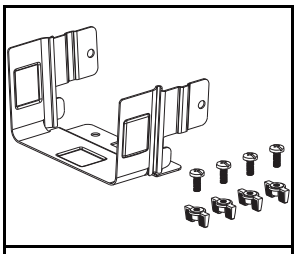

FRTEL6

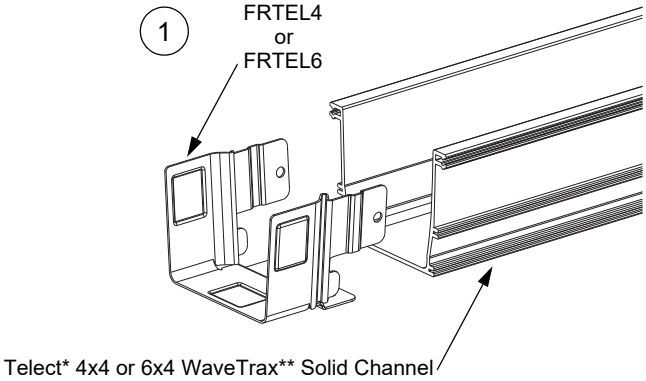

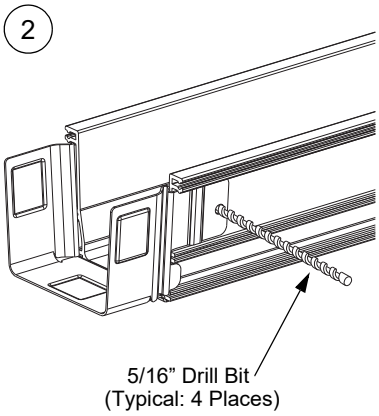

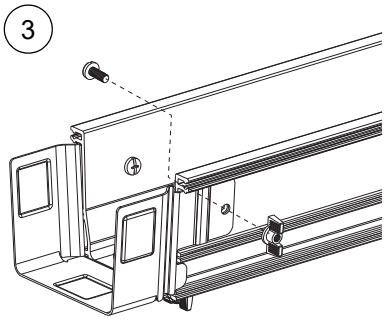

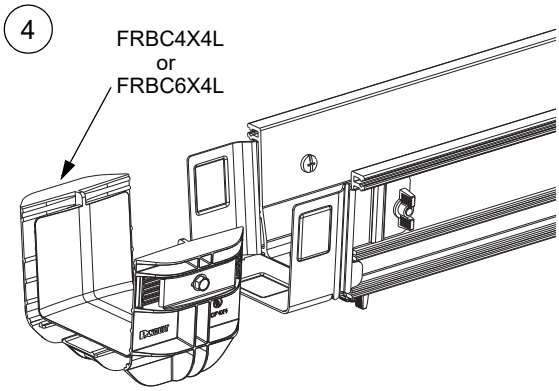

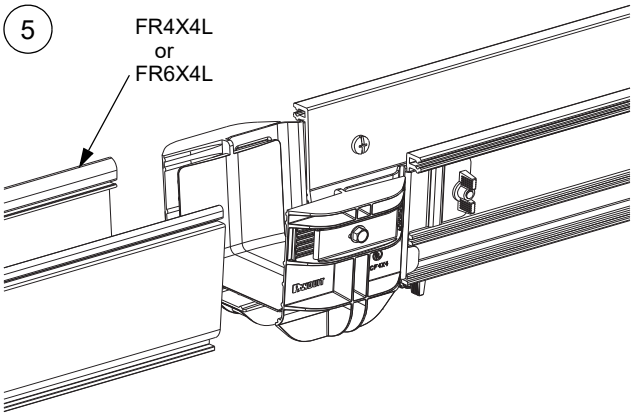

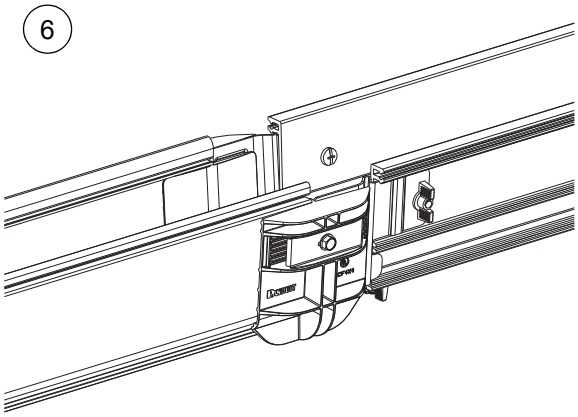

* Telect is a registered trademark of Telect, Inc.

** WaveTrax is a registered trademark of Telect, Inc.

For Instructions in Local Languages and Technical Support:

www.panduit.com/resources/install_maintain.asp

www.panduit.com

E-mail:
techsupport@panduit.com

Phone:
866-405-6654