THIS COPY IS PROVIDED ON A RESTRICTED BASIS AND IS NOT TO BE USED IN ANY WAY DETRIMENTAL TO THE INTERESTS OF PANDUIT CORP.

PANDUIT P/N	WEIGHT
NRD12B1	5.2 LBS/ EACH (2.4 kg/ EACH)

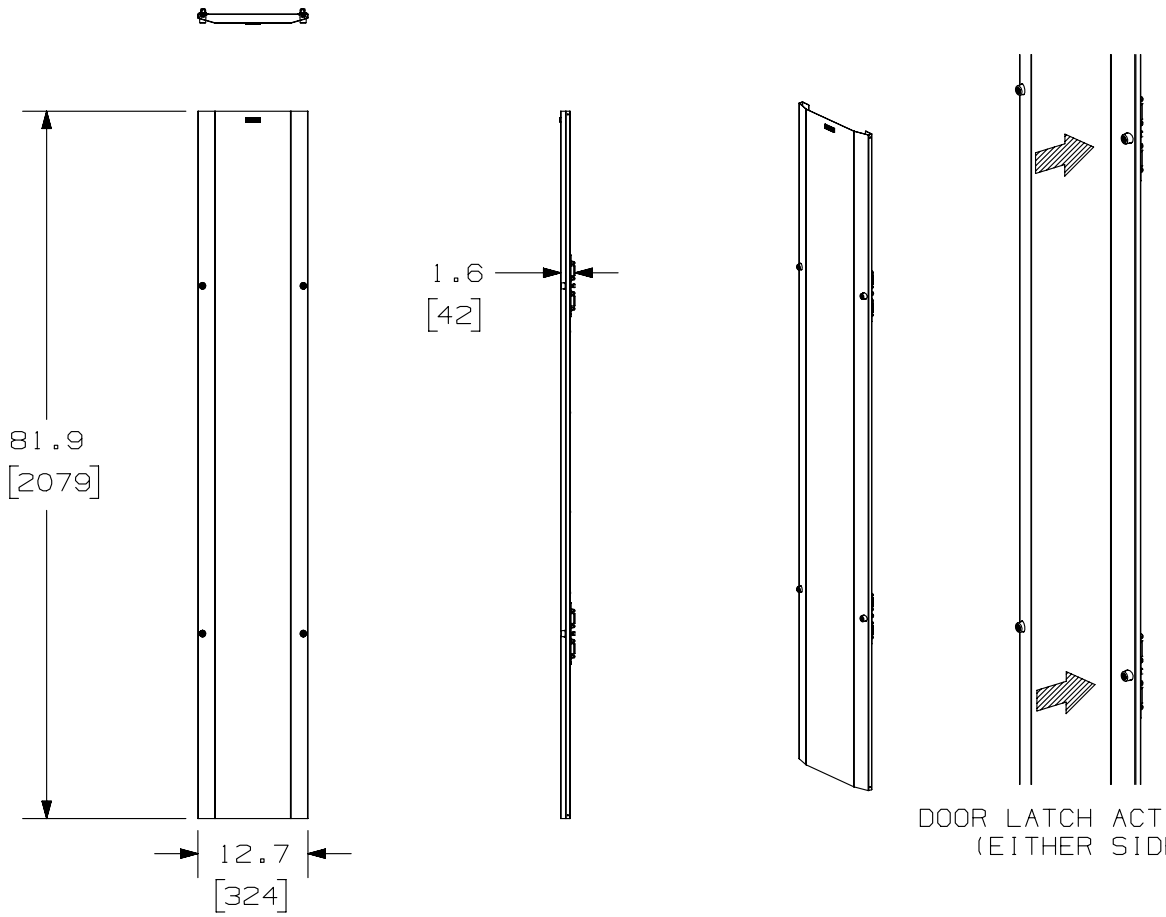

NOTES:
1. VISIT OUR ON-LINE CATALOG AT WWW.PANDUIT.COM FOR A CURRENT LIST OF PRODUCTS APPLICABLE FOR USE WITH THIS PART.
2. DOORS OPEN TO THE LEFT OR THE RIGHT.
3. DIMENSIONS IN PARENTHESIS ARE METRIC.
4. ALL DIMENSIONS ARE REFERENCE ONLY.
5. ALUMINUM WITH BLACK POWDER COAT FINISH.
6. COMPONENTS:
   1- 12" DOOR

REV	DATE	BY	CHK	APR	DESCRIPTION	ECN
01A	11-25-13	BAME	FGR	CMK	UPDATED VIEWS	V10661ZD-DC
00A	8-20-12	BAME	FGR	CMK	DRAWING RELEASED	V10661ZD-DC

TITLE
NETRUNNER HIGH CAPACITY DOOR, 12" WIDE
(NRD12B1)
CUSTOMER DRAWING

ITEM REVISION NAME: V10661ZD/01
DATASET FILE NAME: V10661ZD_DC/01A

UNLESS OTHERWISE SPECIFIED, DIMENSIONAL TOLERANCES ARE: IN [mm]
.X ± .XXX ±
.XX ± ANGLES ±
THIRD ANGLE PROJECTION

MATERIAL: ALUMINUM
DRAWING NUMBER: V10661ZD-DC

DRAWN BY	DATE	CHK	SCALE		SIZE
BAME	8-20-12	FGR	NONE	SHT 1 OF 1	A

D10100DA/16