THIS COPY IS PROVIDED ON A RESTRICTED BASIS AND IS NOT TO BE USED IN ANY WAY DETRIMENTAL TO THE INTERESTS OF PANDUIT CORP.

TYPE/DESCRIPTION	COLOR	MAXIMUM LOSS
SINGLEMODE 9/125um DUPLEX ZIPCORD INTERCONNECT CABLE W/900um TIGHT BUFFER	YELLOW	.75 dB/KM @ 1310nm .75 dB/KM @ 1550nm

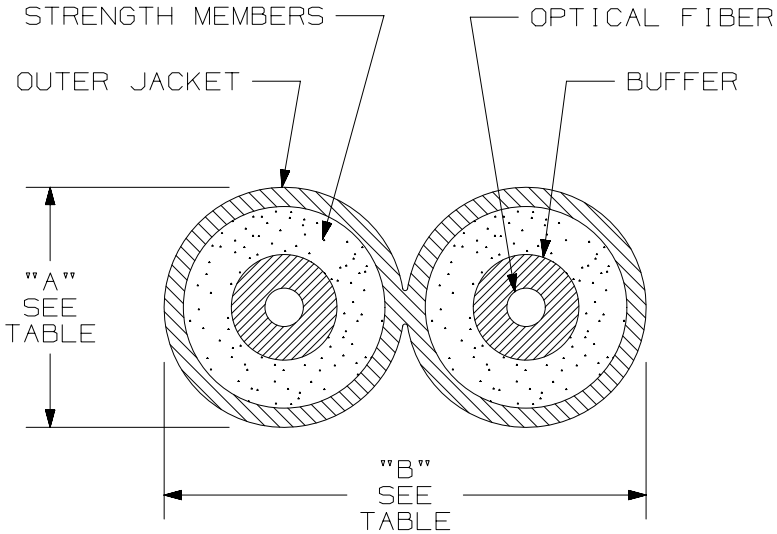

PLENUM - FSIP902Y			
TENSILE LOAD		BEND RADIUS	
INSTALLATION	LONG TERM	INSTALLATION	LONG TERM
220 N (50 lbf)	55 N (12.5 lbf)	58 mm (2.3 in)	29 mm (1.1 in)
CABLE DIMENSIONS	TEMPERATURE		
	INSTALLATION/OPERATION	STORAGE	
"A" = 2.9mm [.11"] "B" = 5.9mm [.23"]	0° C TO +50° C 32° F TO +122° F	-40° C TO +65° C -40° F TO +149° F	

RISER RATED - FSIR902Y			
TENSILE LOAD		BEND RADIUS	
INSTALLATION	LONG TERM	INSTALLATION	LONG TERM
220 N (50 lbf)	55 N (12.5 lbf)	58 mm (2.3 in)	29 mm (1.1 in)
CABLE DIMENSIONS	TEMPERATURE		
	INSTALLATION/OPERATION	STORAGE	
"A" = 2.9mm [.11"] "B" = 5.9mm [.23"]	-20° C TO +50° C -4° F TO +122° F	-40° C TO +65° C -40° F TO +149° F	

NOTES:
1. DIAMETER DIMENSION SHOWN FOR REFERENCE ONLY.
2. CABLE SUPPLIED IN 2500 METER (8202 FT) LENGTHS.
3. FOR PART NUMBERS AND LENGTHS OTHER THAN THOSE SHOWN, CONTACT YOUR PANDUIT SALES PERSON.
4. ALL MATERIALS AND COMPONENTS USED MUST MEET THE MATERIAL RESTRICTIONS OF RoHS, (EUROPEAN DIRECTIVE 2011/65/EU ON THE RESTRICTIONS OF HAZARDOUS SUBSTANCES) AS PROPOSED BY THE RoHS TECHNICAL ADAPTATION COMMITTEE.

WEIGHT OF 2.5km REEL/BOX	
OFNP	OFNR
55.5 kg (122.3 lbs)	51.9 kg (114.4 lbs)

REV	DATE	BY	CHK	APR	DESCRIPTION	ECN
2	9/30/15	JSP	WJM	JGSW	A. UPDATED DRAWING TITLE BLOCK.	02055-19

PART NUMBER: FSIP902Y, FSIR902Y

TITLE: SINGLEMODE 9/125um OPTI-CORE DUPLEX ZIPCORD INTERCONNECT CABLE W/900um TIGHT BUFFER

CUSTOMER DRAWING

ITEM REVISION NAME: M02055BC/01

DATASET FILE NAME: M02055BC_DC_2Z-9um/01A

UNLESS OTHERWISE SPECIFIED, DIMENSIONAL TOLERANCES ARE: IN [mm]

.X ± .XXX ±

.XX ± ANGLES ±

THIRD ANGLE PROJECTION

MATERIAL:

DRAWING NUMBER: 02055-19

DRAWN BY	DATE	CHK	SCALE		SIZE
MC	08-26-04	WMA	NONE	SHT 1 OF 1	A

D10100DA/14